Emerson FB1100 Flow Computer Instruction Manual

Remote Automation Solutions

EMERSON

Device Safety Considerations

- ## Reading these Instructions

  Before operating the device, read these instructions carefully and understand their safety implications. In some situations, improperly using this device may result in damage or injury. Keep this manual in a convenient location for future reference. Note that these instructions may not cover all details or variations in equipment or cover every possible situation regarding installation, operation, or maintenance. Should problems arise that are not covered sufficiently in the text, immediately contact Customer Support for further information.

- ## Protecting Operating Processes

  A failure of this device – for whatever reason -- may leave an operating process without appropriate protection and could result in possible damage to property or injury to persons. To protect against this, you should review the need for additional backup equipment or provide alternate means of protection (such as alarm devices, output limiting, fail-safe valves, relief valves, emergency shutoffs, emergency switches, etc.). Contact Remote Automation Solutions for additional information.

- ## Returning Equipment

  If you need to return any equipment to Remote Automation Solutions, it is your responsibility to ensure that the equipment has been cleaned to safe levels, as defined and/or determined by applicable federal, state and/or local law regulations or codes. You also agree to indemnify Remote Automation Solutions and hold Remote Automation Solutions harmless from any liability or damage which Remote Automation Solutions may incur or suffer due to your failure to ensure device cleanliness.

- ## Grounding Equipment

  Ground metal enclosures and exposed metal parts of electrical instruments in accordance with OSHA rules and regulations as specified in *Design Safety Standards for Electrical Systems*, 29 CFR, Part 1910, Subpart S, dated: April 16, 1981 (OSHA rulings are in agreement with the National Electrical Code). You must also ground mechanical or pneumatic instruments that include electrically operated devices such as lights, switches, relays, alarms, or chart drives.
  Important: Complying with the codes and regulations of authorities having jurisdiction is essential to ensuring personnel safety. The guidelines and recommendations in this manual are intended to meet or exceed applicable codes and regulations. If differences occur between this manual and the codes and regulations of authorities having jurisdiction, those codes and regulations must take precedence.

- ## Protecting from Electrostatic Discharge (ESD)

  This device contains sensitive electronic components which be damaged by exposure to an ESD voltage. Depending on the magnitude and duration of the ESD, it can result in erratic operation or complete failure of the equipment. Ensure that you correctly care for and handle ESD-sensitive components.

System Training

A well-trained workforce is critical to the success of your operation. Knowing how to correctly install, configure, program, calibrate, and trouble-shoot your Emerson equipment provides your engineers and technicians with the skills and confidence to optimize your investment. Remote Automation Solutions offers a variety of ways for your personnel to acquire essential system expertise. Our full-time professional instructors can conduct classroom training at several of our corporate offices, at your site, or even at your regional Emerson office. You can also receive the same quality training via our live, interactive Emerson Virtual Classroom and save on travel costs. For our complete schedule and further information, contact the Remote Automation Solutions Training Department at 800-338-8158 or email us at *education@emerson.com*.

Ethernet Connectivity

This automation device is intended to be used in an Ethernet network which **does not** have public access. The inclusion of this device in a publicly accessible Ethernet-based network is **not recommended**.

Contents

Section 1: Introduction 1

1.1 Safety Labels ... 3
1.2 Features ... 3
1.3 Central Processing Unit (CPU) ... 4
1.3.1 Memory ... 4
1.4 Explosion-proof Enclosure ... 4
1.4.1 Physical Security ... 5
1.5 I/O ... 6
1.6 Power Options ... 6
1.7 Communications ... 7
1.8 Human-Machine Interface (HMI) Module ... 7
1.9 FBxWifi™ Communications ... 8
1.9.1 FBxWifi Antennas ... 9
1.10 Software Tools ... 9
1.11 Autonomous Measurement Mode ... 10
1.12 RoHS2 Compliance ... 10
1.13 Secure Gateway ... 10

Section 2: Installation 11

2.1 Hazardous Locations ... 11
2.2 Environmental Specifications ... 12
2.3 Required Tools ... 12
2.4 Site Considerations ... 13
2.5 General Wiring Guidelines ... 14
2.6 Front or Rear End Caps ... 14
2.6.1 Removing/Replacing Retaining Clamp on End Caps ... 14
2.6.2 Removing the Front or Rear End Caps ... 15
2.6.3 Replacing the Front or Rear End Caps ... 16
2.7 Mounting the Enclosure ... 16
2.7.1 Bolting Considerations ... 17
2.7.2 O-rings with Flange Adapters ... 18
2.7.3 Direct Mount ... 19
2.7.4 Indirect Mount ... 19
2.7.5 Rotating the Housing ... 21
2.8 Grounding the Device ... 22
2.9 Terminal Plate ... 23
2.10 Power Modes ... 24
2.10.1 Low Power Mode ... 24
2.10.2 Standard Power Mode ... 24
2.10.3 Notes on Battery Life ... 25
2.11 Connecting Power ... 25
2.11.1 Connecting DC Power ... 26
2.11.2 Connecting Battery Power ... 26
2.12 Installing the Optional Solar Panel ... 27
2.12.1 Attach Mounting Hardware to the Solar Panel ... 28

2.12.2 Mounting the Solar Panel (Integral Mount) ... 29
2.12.3 Mounting the Solar Panel (Remote Mount) ... 30
2.12.4 Connecting Solar Power ... 31
2.12.5 Adjusting the Optional Solar Panel Tilt Angle ... 32
2.13 Connecting Communication Ports ... 33
2.13.1 Connecting to COM1 ... 34
2.13.2 Connecting to COM2 and COM3 ... 35
2.14 Connecting the RTD ... 38
2.15 Wiring the Digital Output ... 39

Section 3: Operation 41

3.1 Powering Up/Powering Down the Device ... 41
3.2 Establishing Communications ... 41
3.2.1 Communicating with the SCADA Host ... 41
3.2.2 Communicating with a Laptop Using One of the Serial Ports ... 42
3.2.3 Communicating with a Laptop Wirelessly with FBxWifi ... 43
3.3 Communicating using the HMI Module ... 43

Section 4: Service and Troubleshooting 47

4.1 Returning the Unit for Repairs ... 48
4.2 Interpreting the Status LEDs ... 49
4.3 Switch and Buttons ... 51
4.4 Removing/Replacing the HMI Module ... 51
4.5 Replacing the Main Battery Pack ... 52
4.6 Removing/Replacing the SRAM Battery ... 55
4.7 Upgrading System Firmware ... 56

Appendix A: Special Instructions for Class I Division 2 Locations 59

Appendix B: Special Instructions for Class I Division 1 Locations 63

Appendix C: ATEX Non-Sparking Zone 2 Certifications 69

Appendix D: ATEX Flame-Proof Zone 1 Certifications 71

Appendix E: Autonomous Mode Requirements 73

Index 75

Section 1: Introduction

This section covers the following topics:

- Safety Labels
- Features
- Central Processing Unit (CPU)
- Explosion-proof Enclosure
- Physical Security
- I/O
- Power Options
- Communications
- Human-Machine Interface (HMI) Module
- FBxWifi™ Communications
- Software Tools
- Autonomous Measurement Mode
- RoHS2 Compliance
- Secure Gateway

The Emerson FB1100 Flow Computer measures pressure, differential pressure, and temperature for a single meter run of natural gas. This manual describes how to install and configure the Emerson FB1100 Flow Computer hardware.

For information on using the FBxConnect™ configuration software, see the online help that accompanies FBxConnect.

Figure 1-1: FB1100 Flow Computer

1	HMI module
2	Front end cap (cover)
3	Data plate
4	Rear end cap (cover)
5	Conduit fittings
6	Enclosure
7	Sensor module

1.1 Safety Labels

This product may display safety label(s) to identify potential hazards. The same types of notices appear within the documentation. Whenever you see an exclamation point (!) enclosed within a triangle (shown to the left), consult the documentation for additional safety information about the hazard and how to avoid it. The labels used are:

⚠ DANGER

MAY CAUSE DEATH

Observe all precautionary signs posted on the equipment.

Failure to do so may result in death or serious injury to personnel.

⚠ WARNING

DANGER TO PERSONNEL AND EQUIPMENT

Observe all precautionary signs posted on the equipment.

Failure to do so may result in injury to personnel or cause damage to the equipment.

⚠ CAUTION

MAY CAUSE INJURY TO PERSONNEL OR DAMAGE EQUIPMENT.

Observe all precautionary signs posted on the equipment.

Failure to do so may result in injury to personnel or cause damage to the equipment.

⚠ SAFETY FIRST

General instructions and safety reminders.

1.2 Features

The FB1100 Flow Computer includes the following key features:

- Enclosure suitable for use in Class I Division 1 explosion proof and Ex db Zone 1 flame-proof environments
- Enclosure suitable for use in Class I Division 2 non-incendive and Ex nA Zone 2 non-sparking environments
- Integral multi-variable sensor for measurement of Pressure (P) and Differential Pressure (DP)
- Connections for customer-supplied resistance temperature detector (RTD) for measurement of temperature (T)
- Single digital output

- Power from a DC power supply, a lithium battery, or an optional lead acid battery/solar panel combination
- Serial communication options for RS-232, RS-485 (2-wire), RS-485/422 (4-wire).
- HMI module with optional display and back light for local operator interaction
- Optional Wi-Fi® transceiver (802.11 b/g) for field technician to access the flow computer from a laptop without physical cable connection
- Application software supports AGA3, AGA8, ISO 5167, ISO 6976, and API 21.1 calculations in U.S., metric, or other natural gas standard units
- Support for one-year autonomous measurement without external power (lithium battery option)

1.3 Central Processing Unit (CPU)

The flow computer's CPU is a NXP® Kinetis® K61 series CPU with an ARM® Cortex® M4 processor that operates at 4 to 60 MHz depending on the power mode. The CPU runs the Micrium operating system.

1.3.1 Memory

The flow computer includes both static and flash memory.

Table 1-1: Memory

Memory	Usage
8 MB SRAM	Holds in-use configuration, current state of all variables
128 MB Flash	Holds firmware image, historical logs, configuration backup (if saved to flash), and the executing program

1.4 Explosion-proof Enclosure

The FB1100 Flow Computer includes an explosion-proof enclosure made of either aluminum or stainless steel. The enclosure consists of the main housing, two threaded covers, and four conduit entry points.

The four conduit entry points are ¾ in NPT pipe threaded holes that permit entry of field conduit for I/O and communication wiring. ATEX installations use a ¾ in NPT to M20 thread reducer. Unused apertures shall be closed with suitable blanking elements.

The FB1100 Flow Computer can operate in an unprotected outdoor environment. Wiring for I/O, communications, and power enters the enclosure through the four conduit fittings with appropriate protective seals and connects to the terminal plate.

The front end cap (cover) provides a viewing window for the HMI module. You can access the terminal plate by removing the rear end cap (cover).

The FB1100 Flow Computer has North American certification for Class I Division 1 Groups C and D (explosion proof) and Class I Division 2 Groups A, B, C and D (non-incendive) hazardous locations or non-hazardous locations. See *Appendix A* and *Appendix B* for more information.

The FB1100 Flow Computer has European certification for EExd Zone 1 (flame-proof) and EExd Zone 2 (non-sparking) hazardous locations or non-hazardous locations. See *Appendix C* and *Appendix D* for more information.

Details on certification information are included on the data plate screwed to the top of the enclosure.

1.4.1 Physical Security

The flow computer end caps include retaining clamps for ATEX/IEC applications. In addition, if local regulations require it, you can wire a tamper-resistant seal using the tie holes located in the front and rear end caps, and in the coupling screws.

Figure 1-2: Retaining Clamps and Tie Holes for Tamper-resistant Seals

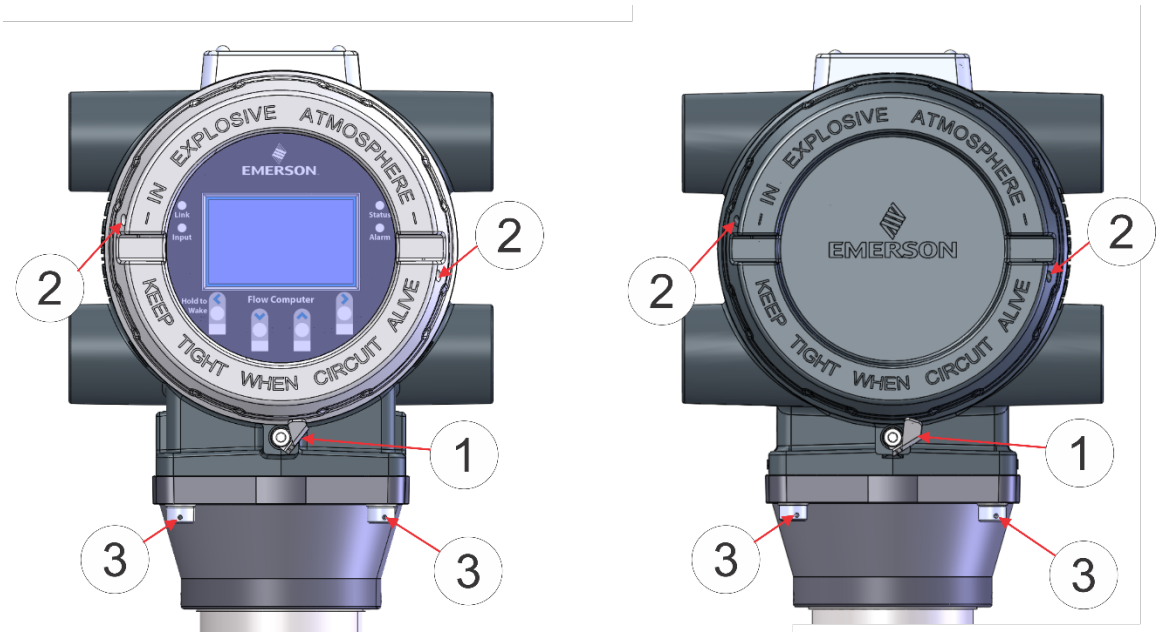

1 Retaining clamp (For ATEX & IEC approved products only)
2 Tie holes in end caps
3 Tie holes in coupling screws

1.5 I/O

The flow computer comes with base I/O from both the CPU and the built-in multi-variable (MV) sensor. Base I/O consists of:

- Pressure (P) input from the MV sensor
- Differential pressure (DP) input from the MV sensor
- Connections for temperature (T) input from a customer-supplied RTD
- Single general purpose digital output (DO) - for use with an odorizer or other device

1.6 Power Options

You can power the flow computer using an external DC input, an internal battery, or an internal rechargeable battery connected to a solar panel.

Important
Use **only** batteries supplied with the flow computer or sold by Emerson Remote Automation Solutions as spare parts for this flow computer. If you substitute a battery you obtain elsewhere **you will void your certification unless it is the identical part from the same manufacturer** as that supplied with the flow computer from Emerson.

Table 1-2: Power Options

Option	Usage
External DC Power Supply	5.7 Vdc to 30 Vdc external supply (Max power at 10 watts)
Lead Acid Battery Pack	▪ 6.0 Vdc ▪ 4.5Ah ▪ Not suitable with ATEX or IECEx applications ▪ Can be optionally charged by a 6-watt solar panel
Lithium Battery Pack	▪ 10 Vdc ▪ 41 Ah (approximate) ▪ Not suitable with ATEX or IECEx applications ▪ Required when using autonomous measurement mode ▪ In autonomous measurement mode allows operation for one year

1.7 Communications

The flow computer includes three serial communication ports. The serial ports allow communication using DNP3, Modbus, BSAP, and ROC protocols.

Table 1-3: Serial Ports

Port	Type	Use
COM1	▪ Serial communications ▪ Software-selectable for RS-232, RS-485 (2-wire), RS-485/422 (4-wire) operation ▪ 4-wire	RS-232, RS-485 (2-wire), RS-485/422 (4-wire) communication to host or other devices. 4-wire used with external radio.
COM2	▪ Serial communications ▪ Software-selectable for RS-232, or RS-485 (2-wire) operation ▪ 2-wire	RS-232 or RS-485 (2-wire) communication to host or other devices.
COM3	▪ Serial communications ▪ Software-selectable for RS-232, or RS-485 (2-wire) operation ▪ 2-wire	RS-232 or RS-485 (2-wire) communication to host or other devices.

1.8 Human-Machine Interface (HMI) Module

The flow computer includes an HMI module with an optional liquid crystal display (LCD) for local operator access to the device. The LCD, if present, shows a series of menus that sequentially display the current values of particular process variables. A configuration parameter in FBxConnect determines whether you must log in first to view the menus. If required, you log in by selecting alphanumeric characters by scrolling through a list until you select the correct character.

The HMI module includes four LEDs to provide status information. Units with the display include four infrared (IR) buttons for operator interaction.

To conserve power, the HMI module enters sleep mode after a period of inactivity. Sleep mode disables FBxWifi communication. In FBxConnect, you can configure the number of minutes of inactivity triggering sleep mode through the LCD Sleep Time parameter. Setting this parameter to 0 disables sleep mode which keeps the HMI module on but uses significantly more power.

Figure 1-3: HMI Module with LCD

Figure 1-4: HMI Module without LCD

Note

If your flow computer does not include the LCD option, you still have the status LEDs and a single IR button for waking up the device (shown in *Figure 1-4*).

1.9 FBxWifi™ Communications

The flow computer has an optional Wi-Fi® transceiver (FBxWifi) that enables you to connect via a laptop or tablet from some small distance away.

This capability allows an operator to potentially remain outside the hazardous location and still communicate with the flow computer. The operator's laptop must have Wi-Fi capability, line-of-sight access to the HMI module, and must be loaded with FBxConnect configuration software. Once connected, the operator can view process values, edit configuration parameters, and collect logs.

Note

The FBxWifi electronics reside inside the HMI module. The HMI module must be awake to use FBxWifi communications You can wake it up manually by holding a finger against the front cover glass over the Hold to Wake button (the left-most button) for typically from five to ten seconds.

1.9.1 FBxWifi Antennas

FBxWifi supports two antenna options:

- Option J1 uses the internal antenna located inside the HMI module. This option has a line-of-sight range of approximated 100 ft (30 m) from the front of the flow computer or 60 ft (18 m) from the back and sides of the flow computer.
- Option J2 uses a factory-installed external antenna. This option has a line-of-sight range of approximately 300 ft (90 m) from the flow computer in all directions. This option is available with either Class 1 Div 2 $_{c}$UL$_{us}$, IEC Ex N, or ATEX Ex N hazardous area approvals.

Figure 1-5. External Wifi Antenna

1.10 Software Tools

FBxConnect provides a series of wizards that allow you to perform configuration activities for the flow computer. You connect a PC running FBxConnect to the flow computer using one of the communication ports or through a wireless connection. You can then:

- Set parameters within your application
- Configure I/O channels
- Specify the serial communication method for a port (RS-232 to RS-485) as needed
- View or collect audit trail information such as alarm, event, or historical logs
- Update system firmware

1.11 Autonomous Measurement Mode

You can configure the FB1100 Flow Computer to operate as a low power measurement device that operates independently for one year. In this autonomous measurement mode, the flow computer operates similarly to earlier generation chart recorders, collecting data from non-critical, low-flow applications and storing it for later retrieval.

Autonomous measurement mode supports collection of data from the multi-variable sensor and RTD only. This mode requires the lithium battery pack; no external power supply is required.

You can interact with the device through the HMI module's infrared buttons or through a laptop running FBxConnect. To maintain low power consumption for the battery, using this mode limits you to 30 minutes of interaction per month.

See *Appendix E* for more information.

1.12 RoHS2 Compliance

Device with Integral MVS:

RoHS (2) EU Directive 2011/65/EU: This product may be considered out-of-scope when used for the intended design purpose in a Large Scale Fixed Installation (LSFI).

Consult *https://www.emerson.com/compliance* for up-to-date product information.

1.13 Secure Gateway

For enhanced data security when using an IP/Ethernet connection or a serial connection into an IP terminal server, Emerson Remote Automation Solutions recommends adding an industrial router with VPN and firewall security. Recommended solutions include the MOXA EDR-810, the Hirschman Eagle One, or the Phoenix mGuard rs4000 (or equivalents). An example of how to install one of these devices to the RTU can be found in the Emerson Remote Automation Solutions *MOXA® Industrial Secure Router Installation Guide* (part number D301766X012). For further information, contact your Emerson Impact Partner or the individual vendor’s website.

Section 2: Installation

This section covers the following topics:

- Hazardous Locations
- Environmental Specifications
- Required Tools
- Site Considerations
- General Wiring Guidelines
- Front or Rear End Caps
- Mounting the Enclosure
- Grounding the Device
- Terminal Plate
- Power Modes
- Connecting Power
- Installing the Optional Solar Panel
- Connecting Communication Ports
- Connecting the RTD
- Wiring the Digital Output

The flow computer ships from the factory fully assembled, except for the optional solar panel assembly.

2.1 Hazardous Locations

The housing for the FB1100 Flow Computer is an explosion-proof case designed to operate in hazardous locations.

For North America the FB1100 Flow Computer has certifications for Class I, Division 1 (Groups C & D) explosion-proof, Class I Division 2 (Groups A, B, C & D) non-incendive, and non-hazardous locations only. *Appendix A* contains special information for Class I Division 2 installations; *Appendix B* contains special information for Class I Division 1 installations.

For Europe the FB1100 Flow Computer has certifications for Ex db Zone 1 flame-proof and for Ex nA Zone 2 non-sparking installations and non-hazardous locations only. *Appendix C* contains special information for Ex nA Zone 2 installations; *Appendix D* contains special information for Ex db Zone 1 installations.

All certifications are listed on the data plate located on the **top** of the device.

2.2 Environmental Specifications

This section summarizes the environmental specifications for the device. For full details, refer to the product data sheet *FB1100 Flow Computer* (D301781X012).

Table 2-1: Environmental Specifications

Specification	Range
Ambient Temperature	-40°C to +80 °C (-40 °F to +176 °F) - no battery, C1D1/C1D2 -40°C to +80 °C (-40°F to +176 °F) - lead acid battery, C1D1/C1D2 -40°C to +80 °C (-40 °F to +176 °F) - lithium battery, C1D1/C1D2 -40°C to +80 °C (-40 °F to +176 °F) - no battery, ATEX/IEC Ex db -40°C to +80 °C (-40 °F to +176 °F) - no battery, ATEX/IEC Ex nA
Maximum Process Connection Temperature	120 °C (248 °F)
Humidity	5% to 95% non-condensing
Vibration	2g over 10 to 150 Hz; 1g over 150 to 200 Hz

2.3 Required Tools

Certain tools and equipment are required for installing and servicing the flow computer.

Table 2-2: Required Tools

Tool	Use
Torque wrench	For bolting/mounting the flow computer
2.5 mm hexagonal wrench	For manipulating rotation set screw
3 mm hexagonal wrench	For screw for M4 x 0.7 end cap retaining clamp (ATEX required)
9/16 in hexagonal wrench	For installing/removing ¾ in NPT conduit plugs
1 1/16 in combination wrench	For installing/removing ¾ in NPT to M20 thread reducer (ATEX required)
#1 Phillips-head screwdriver	For screws on HMI module
#2 Phillips-head screwdriver	For screws on other modules and boards
1/8 inch flat-head screwdriver	For 5.08 mm pitch terminal block connections
Laptop PC running Field Tools with FBxConnect configuration software	For software configuration

2.4 Site Considerations

The flow computer must reside in an accessible location for configuration and service. Refer to the dimensional drawings for information on the space required.

- Ensure the installation location provides easy access to the HMI module.
- If your unit includes the optional solar panel, ensure the installation location provides sufficient space to mount the solar panel and adequate sunlight to charge the battery.
- If your unit includes the optional FBxWifi ensure the installation location provides line-of-sight access to the transceiver.

Figure 2-1: FB1100 Flow Computer Dimensions – Multivariable Sensor

2.5 General Wiring Guidelines

The flow computer's pluggable terminal blocks use compression-type terminals that accommodate wire between 28 and 12 AWG.

- When making a connection, insert the bare end of the wire (approx. 1/4" max) into the clamp adjacent to the screw and secure the screw.
- To prevent shorts, ensure that no bare wire is exposed.
- Allow some slack in the wire while making terminal connections. Slack makes the wires more manageable and helps minimize mechanical strain on the terminal blocks.
- Use twisted pair, shielded and insulated cable for communication and I/O wiring to minimize signal errors caused by electromagnetic interference (EMI), radio frequency interference (RFI), and transients. When using shielded cable, ground all shields at only one point in the appropriate system. This prevents circulating ground current loops that can cause signal errors.

2.6 Front or Rear End Caps

The flow computer includes two threaded covers (end caps). The front end cap includes a window for viewing the HMI module; the rear end cap provides access to the terminal plate for power and I/O wiring.

2.6.1 Removing/Replacing Retaining Clamp on End Caps

For flameproof ATEX/IEC applications, each end cap includes a retaining clamp which screws down to prevent the end cap from being unscrewed.

Figure 2-2: Front End Cap with Retaining Clamp Fitted

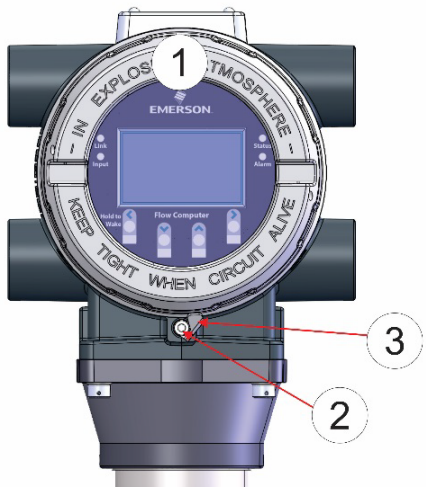

1 End Cap
2 Screw
3 Retaining Clamp

Figure 2-3. Retaining Clamp in Place

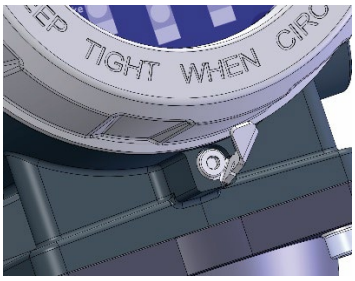

To loosen or tighten the screw, use a 3mm hexagonal wrench. When tightening, torque to 12 in-lbs (1.4 N m).

Figure 2-4. Retaining Clamp and Screw

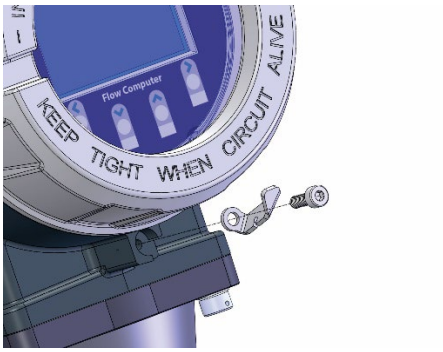

2.6.2 Removing the Front or Rear End Caps

⚠ DANGER

EXPLOSION HAZARD: Never remove end cap(s) in a hazardous location. Removing end cap(s) in a hazardous location could result in an explosion.

Note

If you need more leverage place a long screwdriver or other appropriate tool across the two notches in the end cap to act as a pry bar (see *Figure 2-5*).

Figure 2-5: Removing or Tightening the End Cap with Long Screwdriver

1. Remove the retaining clamp (if present). (See *Section 2.6.1*.)
2. Grasp the end cap (front or rear).

Figure 2-6: Front (left) and Rear (right) End caps

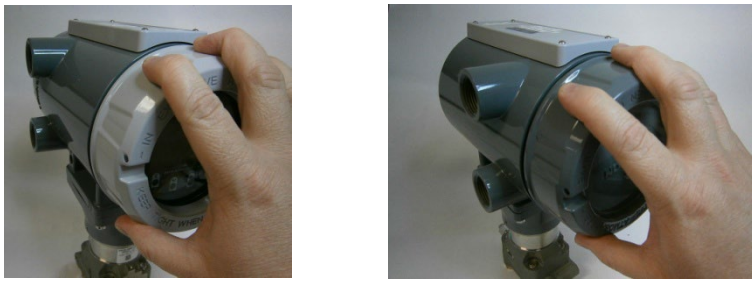

3. Unscrew the end cap turning it counter-clockwise until it comes off. Set it aside in a safe location.

Figure 2-7: Front (left) and Rear (right) End Caps Removal

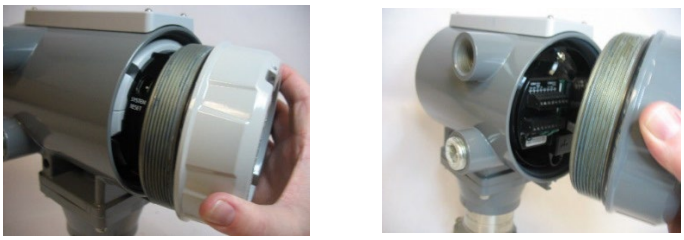

2.6.3 Replacing the Front or Rear End Caps

DANGER

EXPLOSION HAZARD: Ensure the area in which you perform this operation is non-hazardous. Performing this operation in a hazardous area could result in an explosion.

1. Grasp the end cap (front or rear).
2. Carefully align the end cap threads with the threads of the enclosure.

Important
When replacing the rear end cap, ensure wires connecting to the terminal plate do not get crimped or caught between the end cap threads and the enclosure.

3. Screw the end cap clockwise (eight full turns) until it is tightly sealed to the enclosure.
4. Replace the retaining clamp (if required). (See *Section 2.6.1.*)

Note
If you need more leverage place a long screwdriver or other appropriate tool across the two notches in the end cap to act as a pry bar (see *Figure 2-5*).

2.7 Mounting the Enclosure

You can mount the flow computer either directly to a manifold on the pipeline or indirectly on a two-inch pipe or pole.

Installations use either a traditional mounting kit or a coplanar mounting kit.

2.7.1 Bolting Considerations

If the flow computer installation requires assembly of a process flange, a manifold, or flange adapters, follow these assembly guidelines to ensure a tight seal for optimal performance characteristics of the flow computer.

Only use bolts supplied with the flow computer or sold by Emerson Remote Automation Solutions as spare parts. Refer to the figure for common flow computer assemblies with the bolt length required for proper flow computer installation.

⚠ DANGER

EXPLOSION HAZARD: Ensure the area in which you perform this operation is non-hazardous. Performing this operation in a hazardous area could result in an explosion.

Note

For all other manifolds, contact your local Emerson Sales office or Emerson Impact Partner.

Bolts are typically carbon steel or stainless steel. Confirm the material by viewing the markings on the head of the bolt and referencing the figure. If bolt material is not shown in the figure, contact your local Emerson Remote Automation Solutions representative for more information.

Figure 2-8: Transmitter with Coplanar Flange

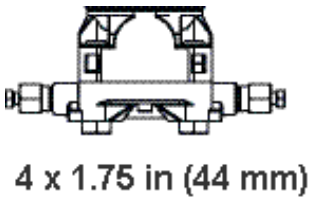

Figure 2-9: Transmitter with Coplanar Flange and Optional Flange Adapters

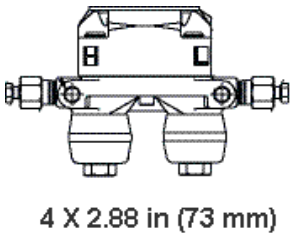

Figure 2-10: Transmitter with Traditional Flange and Optional Flange Adapters

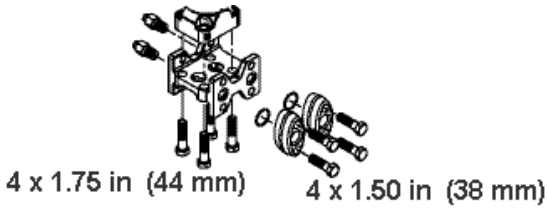

Use the following bolt installation procedure:

1. Carbon steel bolts do not require lubrication. Stainless steel bolts are factory-coated with a lubricant to ease installation. Do not apply any additional lubricant when installing either type of bolt.
2. Finger-tighten the bolts.
3. Torque the bolts to the initial torque value using a crossing pattern. See *Table 2-3* for initial torque value.
4. Torque the bolts to the final torque value using the same crossing pattern. See *Table 2-3* for final torque value.
5. Verify that the flange bolts protrude through the sensor module before applying pressure.

Table 2-3: Torque Values for the Flange and Flange Adapter Bolts

Bolt Material	Head markings	Initial Torque	Final Torque
Carbon Steel (CS)		300 in. -lbs. (33.9 N m)	650 in. -lbs. (73.4 N m)
Stainless Steel (SST)	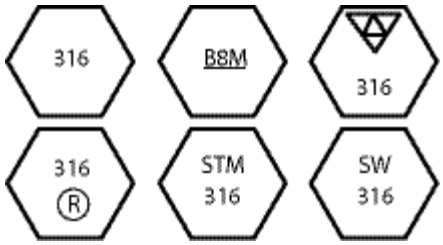	150 in. -lbs. (16.9 N m)	300 in. -lbs. (33.9 N m)

Figure 2-11: Proper Bolt Installation

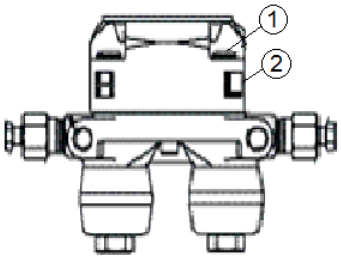

1 Bolt
2 Sensor module

2.7.2 O-rings with Flange Adapters

⚠ DANGER

Failure to install proper flange adapter O-rings may cause process leaks, which can result in death or serious injury. Only use the O-ring that is designed for its specific flange adapter.

Figure 2-12: O-rings with Flange Adapters

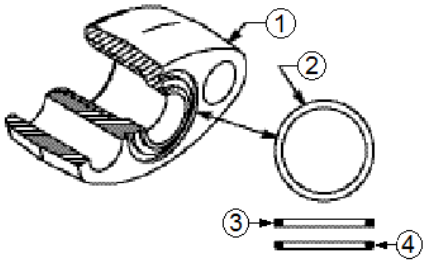

1	Flange
2	O-ring
3	Square PTFE-based profile
4	Round Elastomer profile

1. Whenever the flange or adapters are removed, visually inspect the O-rings.
2. Replace the O-rings if there are any signs of damage, such as nicks or cuts.
3. If the O-rings are replaced, re-torque the flange bolts and alignment screws after installation to compensate for seating of the O-rings.

2.7.3 Direct Mount

Direct mount installations use either a traditional mounting kit or a coplanar mounting kit. Mount the flow computer directly to the natural gas pipeline only if the pipeline includes a process manifold.

⚠ DANGER

EXPLOSION HAZARD: Ensure the area in which you perform this operation is non-hazardous. Performing this operation in a hazardous area could result in an explosion.

1. Place taps in the top or side of the line.
2. Mount the flow computer beside or above the taps.

2.7.4 Indirect Mount

You can mount the flow computer to a two-inch pipe or pole. Indirect mount can use the coplanar, or traditional flange mounting kits.

⚠ DANGER

EXPLOSION HAZARD: Ensure the area in which you perform this operation is non-hazardous. Performing this operation in a hazardous area could result in an explosion.

Figure 2-13: Traditional Flange Mounting Kit

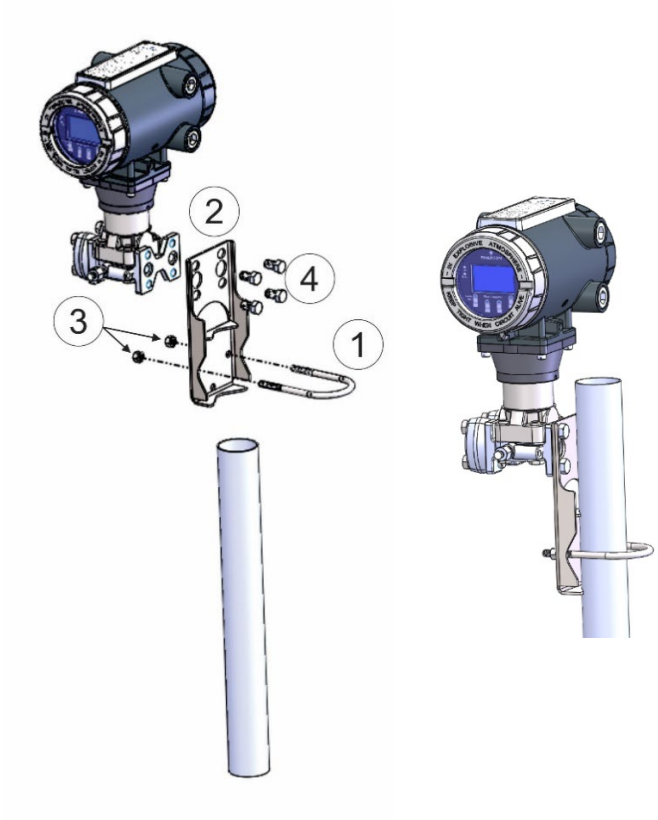

1. 2.0 in. pipe diam. U-bolt assembly (5/16-18 x 4.0 LG) with (2) nuts (item 3)
2. Mounting bracket
3. Apply Loctite® 222™ Low Strength Purple Threadlocker to nuts. Torque nuts to 30 in-lbs (3.4 N m)
4. 7/16-20 x .625 cs/zinc cobalt screws (4). Torque to 30 in-lbs (3.4 N m)

Figure 2-14: Coplanar Mounting Kit

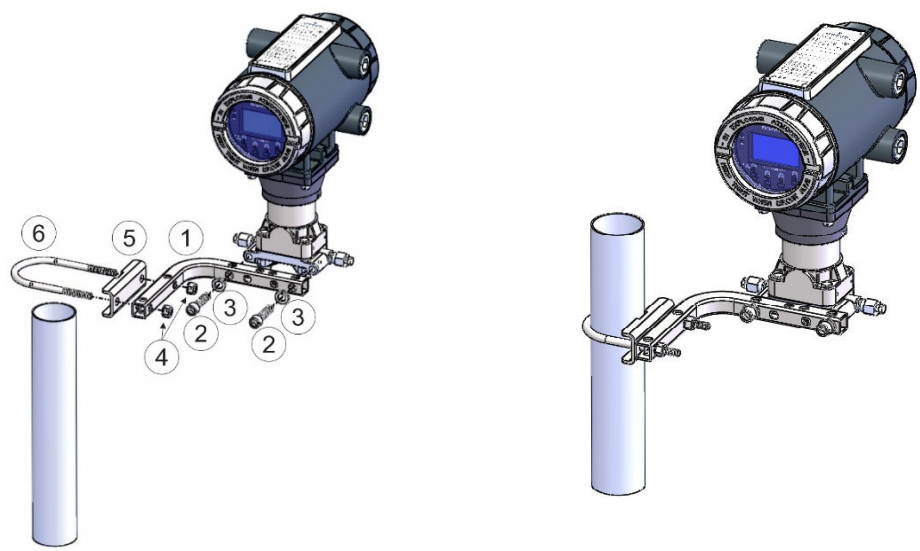

1 Tubular L-shaped bracket
2 3/8-16 x 1 ½ in socket head wire lockable screw (2) – Apply Killark® LUBG-6 Thread Lubricant to threads. Torque screws to 30 in-lbs (3.4 N m)
3 Split 3/8 lock washer (2)
4 5/16-18 keps nut (2). Apply Loctite 222 Low Strength Purple Threadlocker to nuts. Torque nuts to 30 in-lbs (3.4 N m)
5 U-bolt bracket
6 2-inch diameter pipe U-bolt

2.7.5 Rotating the Housing

To improve accessibility to the HMI module or to ease wiring, you can optionally rotate the housing.

Important
Never rotate the housing **more than 180 degrees** from its original (as-shipped) position. Over-rotation can break electronics within the unit.

Figure 2-15: Housing Rotation Set Screw (1 each side)

1 Set Screw (one each side)

⚠ DANGER

EXPLOSION HAZARD: Ensure the area in which you perform this operation is non-hazardous. Performing this operation in a hazardous area could result in an explosion.

1. Loosen the two housing rotation set screws.
2. Rotate the housing **no more than** 180 degrees from its original (as-shipped) position.
3. Re-tighten the two housing rotation set screws. Torque to 6 in-lbs. (0.7 N m).

2.8 Grounding the Device

The flow computer includes a grounding lug on the terminal plate.

Figure 2-16: Ground Lug

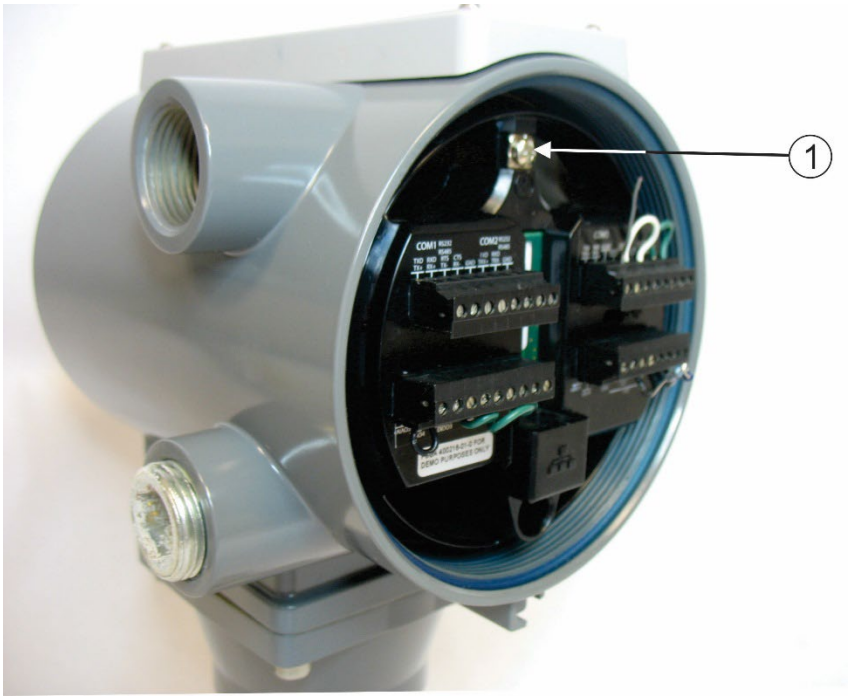

1 Ground lug

⚠ DANGER

EXPLOSION HAZARD: Ensure the area in which you perform this operation is non-hazardous. Performing this operation in a hazardous area could result in an explosion.

- Once you have installed the unit, run a ground wire between the ground lug and a known good earth ground. You route the ground wire through one of the conduit fittings.
- Use stranded copper wire to earth ground and keep the length as short as possible.
- Clamp or braze the ground wire to the ground bed conductor (typically a stranded copper AWG 0000 cable installed vertically or horizontally).

- Run the ground wire so that any routing bend in the cable has a minimum radius of 30.5 cm (12 inches) below ground and 20.4 cm (8 inches) above ground.
- For more information on grounding or if your installation uses cathodic protection, refer to *Site Considerations for Equipment Installation, Grounding, and Wiring* (D301452X012).

2.9 Terminal Plate

The terminal plate includes the various terminal blocks (TB) for power and I/O connections.

Note
AI/AO and DI connections are disabled in the FB1100 Flow Computer.

Figure 2-17: Terminal Plate

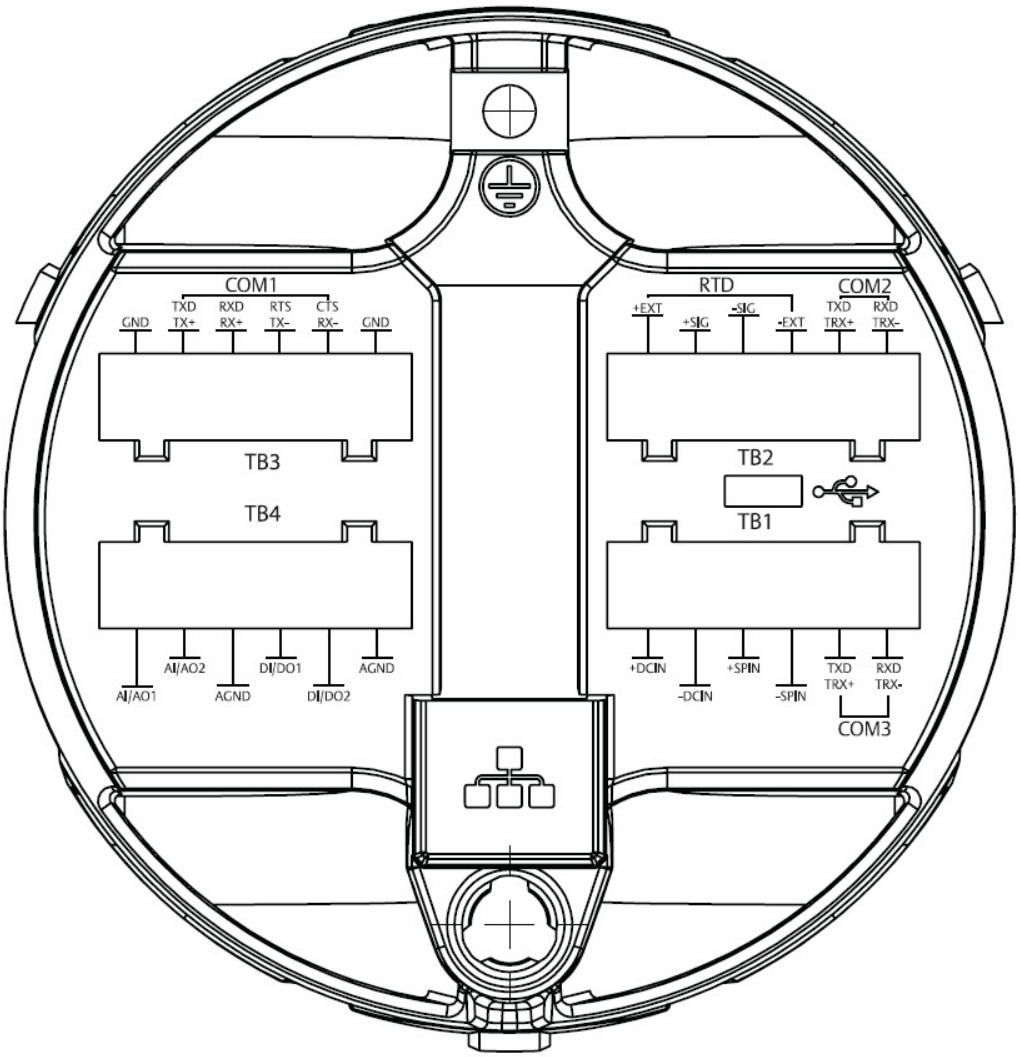

2.10 Power Modes

To keep power consumption to a minimum, especially for remote sites, the flow computer can run in two different power modes: Low Power Mode (4 or 8 MHz CPU clock speed) or Standard Power Mode (60 MHz CPU clock speed).

2.10.1 Low Power Mode

The flow computer normally runs in low power mode for typical metering applications. The radio Power Control function (configurable in FBxConnect) switches the flow computer into standard power mode at specified times when serial communications are required, then it reverts to low power mode when the communication period is over.

The local display (HMI module) with FBxWifi communications and FBxWifi uses additional power. You can configure it in FBxConnect to shut down after a period of inactivity.

Table 2-4: Typical Power Usage – Low Power Mode at Room Temperature

Description	Power Usage (mW) at 6Vdc
Base flow computer with integral multivariable DP and pressure sensor and temperature measurement for a single meter run Historical configuration supports maximum of: ▪ 4 averages ▪ 12 Station 1 history points (Group 4) ▪ 10 User Periodic history points (Group 1)	36
Additional Load Options:	
Display and backlight active	296
FBxWifi	315
FBxWifi and display active	340
DO active (1 Hz, 50:50 duty cycle, no load)	10

Important
If you increase the number of history points/averages beyond any of the maximum limits detailed in *Table 2-4*, the flow computer **cannot** operate in low power mode and **automatically** runs in standard power mode.

2.10.2 Standard Power Mode

When serial communication is active the flow computer operates in standard power mode. The unit also uses standard power mode when:

- The HMI module display is ON
- FBxWifi is active

- Power control zone enabled

Table 2-5: Typical Power Usage – Standard Power Mode at room temperature

Description	Power Usage (mW) at 6Vdc	Power Usage (mW) at 12Vdc	Power Usage (mW) at 24Vdc
Base flow computer with integral multivariable DP and pressure sensor and temperature measurement for a single meter run	209	224	265
Additional Load Options:			
Display and backlight active	162	168	178
FBxWifi	189	185	200
FBxWifi and display active	204	207	221
DO active (1 Hz, 50:50 duty cycle, no load)	21	23	20

2.10.3 Notes on Battery Life

Battery life varies based on numerous factors including temperature, communication usage, and various load options. To achieve the maximum battery life noted in the product data sheet requires that you:

- Limit use of the display, backlight, and FBxWifi options.
- Limit communication activity.
- Disable power to all I/O (except for the MV or static pressure sensor, or RTD). To do this, click **Configure > I/O Setup > I/O Configuration > Properties** and select **Disable** for each I/O module.

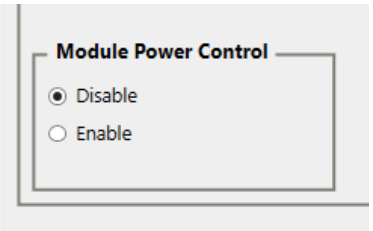

Refer to the product data sheet *FB1100 Flow Computer* (D301781X012) for information on the additional power load of various options.

2.11 Connecting Power

Power can come from an external DC supply, a lead acid battery pack with a solar panel, or a lithium battery pack.

Power connections are made through conduit fittings to the terminal plate. Remove the rear cover for access to the terminal plate.

For solar power connections, refer to *Section 2.12.4*.

2.11.1 Connecting DC Power

DANGER

EXPLOSION HAZARD: Ensure the area in which you perform this operation is non-hazardous. Performing this operation in a hazardous area could result in an explosion.

When power comes from an external DC supply, connect using the +DCIN and –DCIN terminals. Use standard copper wire (#18 AWG minimum). The device supports 6V, 12V and 24V power supplies. It accepts DC voltage from 5.7 to 30V; the amount of power required varies depending upon the options used.

Figure 2-18: DC Power Connections

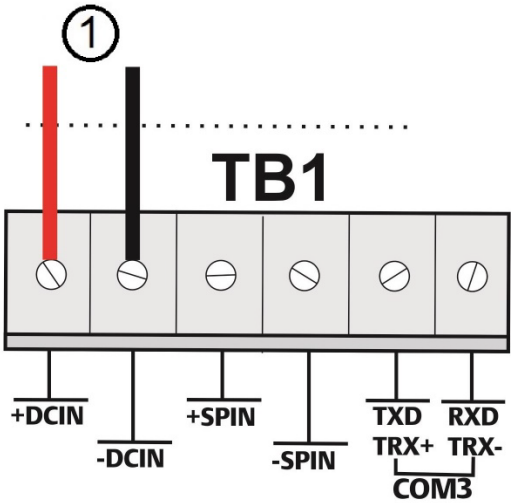

1 To External power supply

Note

If your flow computer does not power on, check that the polarity of the DC input voltage wiring connections match *Figure 2-18*. If you accidentally reversed the polarity of the connectors, it triggers a polyfuse (positive coefficient temperature thermistor) to protect the device from damage. Once the polarity is corrected, the polyfuse resets automatically to allow for proper operation.

2.11.2 Connecting Battery Power

DANGER

EXPLOSION HAZARD: Ensure the area in which you perform this operation is non-hazardous. Performing this operation in a hazardous area could result in an explosion.

Important

If you purchased this device with the rechargeable lead acid battery pack, be aware that the lead acid battery pack must always be stored in a charged state. If you do not intend to install the flow

computer immediately, make provisions to “top-off” the lead acid battery at six-month intervals. Failure to do so could sharply reduce battery life or result in a dead battery.

When power comes from an internal battery pack, the battery pack plugs into one of two connectors.

Figure 2-19: Connecting the Battery Pack

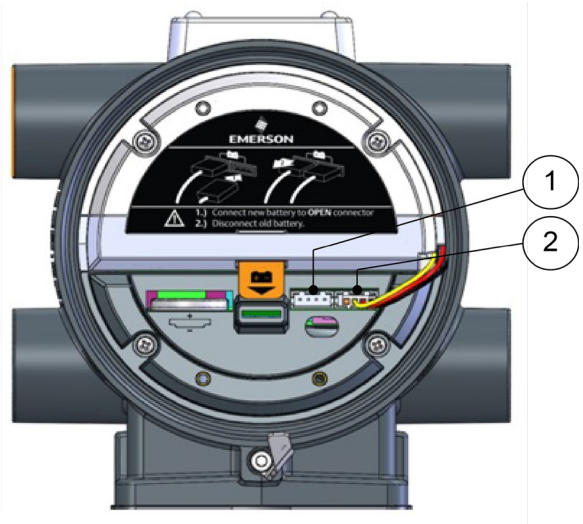

1 Left Battery Connector
2 Right Battery Connector

Restriction

The solar panel and lead acid battery combination **cannot** be used with ATEX/IECEx applications.

2.12 Installing the Optional Solar Panel

If you purchased the lead acid battery/solar panel kit for main power, you need to install the supplied 6W solar panel.

If you purchased the lead acid battery with a solar regulator but you are supplying your own solar panel, follow the manufacturer’s instructions for remote mounting.

⚠ DANGER

EXPLOSION HAZARD: Ensure the area in which you perform this operation is non-hazardous. Performing this operation in a hazardous area could result in an explosion.

Solar panel installation involves:

- Attaching mounting hardware to the solar panel (if not attached prior to shipment).
- Mounting the solar panel in one of two ways:
  - Integral mount (solar panel attaches directly to the flow computer)
  - Remote mount (solar panel mounts to a pole)

- Wiring power to the solar panel.
- Setting the tilt angle of the panel for maximum solar exposure.

2.12.1 Attach Mounting Hardware to the Solar Panel

⚠ DANGER

EXPLOSION HAZARD: Ensure the area in which you perform this operation is non-hazardous. Performing this operation in a hazardous area could result in an explosion.

Attach mounting hardware to the solar panel as shown in *Figure 2-20*.

- Attach aluminum tilt brackets (Item 2) to solar panel using the provided pan head screws (Item 3), hex nuts (Item 10 in *Figure 2-21*), and #10 lock washers (Item 9 in *Figure 2-21*).
- Apply Loctite 222 threadlocker removable adhesive sparingly to threads of hex nuts (Item 6). Attach mounting bracket to tilt brackets using provided hex nuts (Item 6), hex bolts (Item 5), washers (Item 4), and spring lock washers (Item 7). The spring lock washer goes between the washer and the nut. Torque to 30 in-lbs (3.4 N m).

Figure 2-20: Attaching Mounting Hardware to the Solar Panel

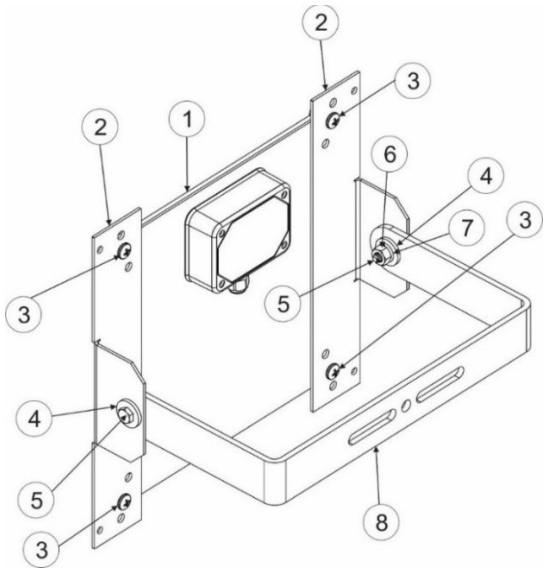

1	6V, 6W solar panel
2	Aluminum tilt bracket (2)
3	10-32 x ½ pan head screw (4). Note: Matching hex nuts and washers not visible in this graphic; see Items 9 and 10 in *Figure 2-22*
4	5/16 flat washer (4); only two visible in this graphic
5	5/16-18 x .75 LG hex head bolt (2)
6	5/16-18 hex nut (2); only one visible in this graphic
7	5/16 flat spring lock washer (2) only one visible; placed on bolt between washer and nut
8	Mounting bracket

2.12.2 Mounting the Solar Panel (Integral Mount)

⚠ DANGER

EXPLOSION HAZARD: Ensure the area in which you perform this operation is non-hazardous. Performing this operation in a hazardous area could result in an explosion.

Restriction

The solar panel and lead acid battery combination **cannot** be used with ATEX/IECEx applications. The integral mount solar panel **cannot** be used in a Class I Division 1 area; C1D1 solar panels **must** be remote mounted with the solar panel in a safe area.

Figure 2-21: Integral Mounted Solar Panel

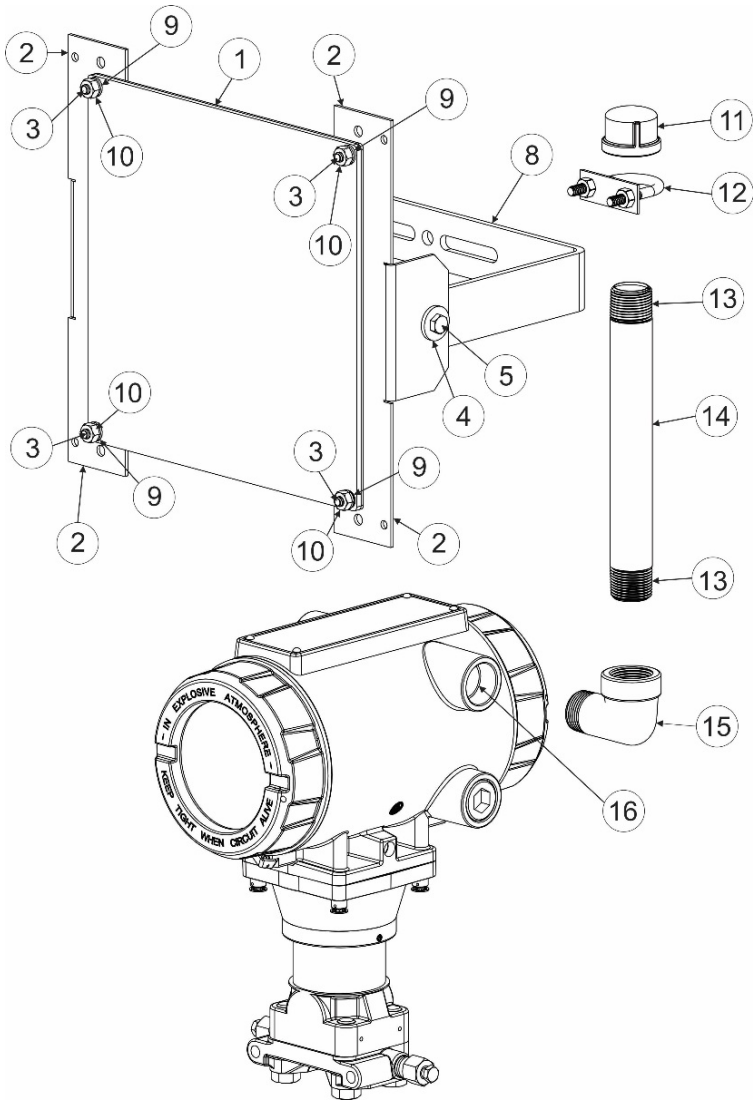

1 6V, 6W solar panel
2 Aluminum tilt bracket (2)
3 10-32 x ½ pan head screw (4).
4 5/16 flat washer (4); only two visible in this graphic

5	5/16-18 x .75 LG hex head bolt (2)
8	Mounting bracket
9	#10 lock washer (4)
10	#10-32 hex nut (4)
11	¾ NPT pipe cap
12	U-bolt 1 1/8 in. diam. pipe x ¼ -20 x 2 inch long
13	Pipe threads (2)
14	¾ NPT x 8 inch long threaded pipe
15	¾ NPT 90 degree female x male elbow pipe
16	Conduit fitting

1. Apply Loctite® 380™ Black Instant Adhesive to threads of elbow pipe (Item 15). Attach elbow pipe (Item 15) to the flow computer conduit opening (Item 16); torque to 50 in-lbs (5.6 N m).
2. Apply Loctite 380 adhesive sparingly to threads of pipe (Item 14).
3. Attach pipe (Item 14) to elbow pipe (Item 15). Torque to 50 in-lbs (5.6 N m).
4. Attach pipe cap (Item 11) to top of pipe (Item 14). Torque to 50 in-lbs (5.6 N m).
5. Apply Loctite 222 threadlocker removable adhesive sparingly to threads of U-bolt (Item 12).
6. Attach solar panel assembly to pipe (Item 14) using U-bolt (Item 12).
7. Attach a ground wire at the back of the solar panel. For more information on grounding, refer to *Site Considerations for Equipment Installation, Grounding, and Wiring Manual* (D301452X012).
8. Adjust swivel and tilt angle for maximum solar exposure (see *Section 2.12.5*).

2.12.3 Mounting the Solar Panel (Remote Mount)

⚠ DANGER

EXPLOSION HAZARD: Ensure the area in which you perform this operation is non-hazardous. Performing this operation in a hazardous area could result in an explosion.

Restriction

The solar panel and lead acid battery combination **cannot** be used with ATEX/IECEx applications.

1. Apply Loctite 222™ threadlocker sparingly to threads of U-bolt (Item 12 in *Figure 2-22*.)
2. Attach solar panel assembly to pole using U-bolt (Item 12). Torque to 30 in-lbs (3.4 N m).
3. Adjust swivel and tilt angle for maximum solar exposure (see *Section 2.12.5*).

Figure 2-22: Remote Mounted (pole mounted) Solar Panel

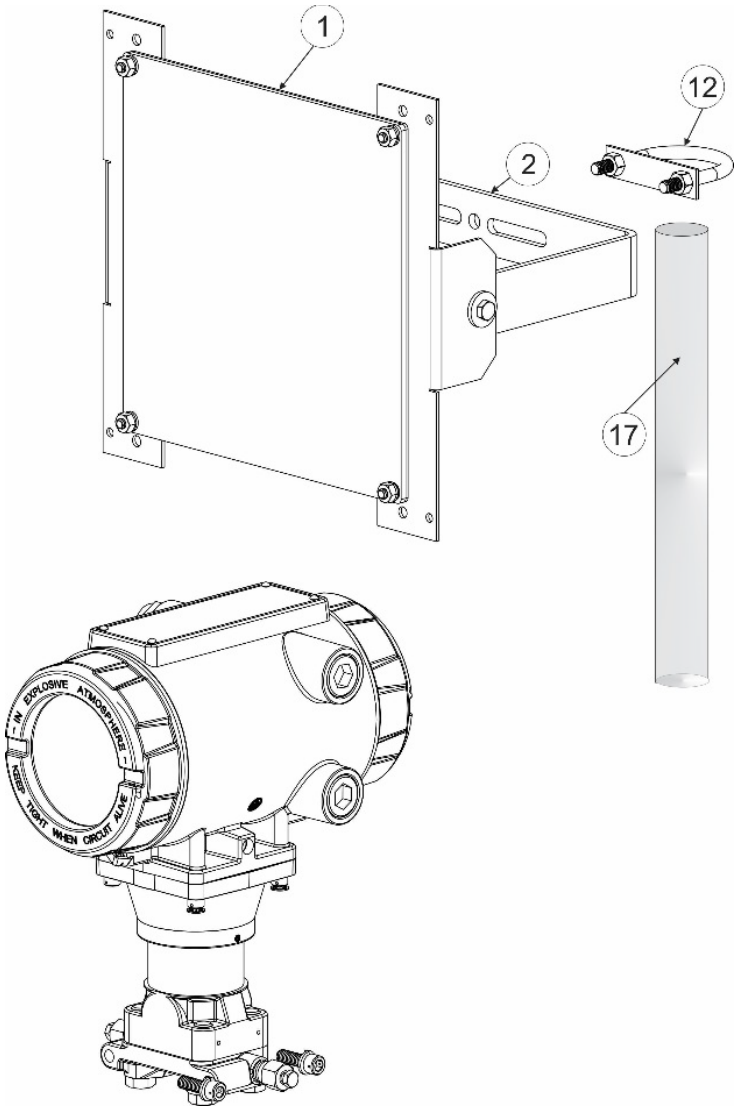

1	6V, 6W solar panel
2	mounting bracket
12	U-bolt 1 1/8 in. diam. pipe x ¼ -20 x 2 inch long
17	pole (customer supplied)

2.12.4 Connecting Solar Power

⚠ DANGER

EXPLOSION HAZARD: Ensure the area in which you perform this operation is non-hazardous. Performing this operation in a hazardous area could result in an explosion.

When power comes from a solar panel/lead acid battery combination, connect using the +SPIN and –SPIN terminals and standard copper wire (#18 AWG minimum).

Figure 2-23: Wiring Solar Power

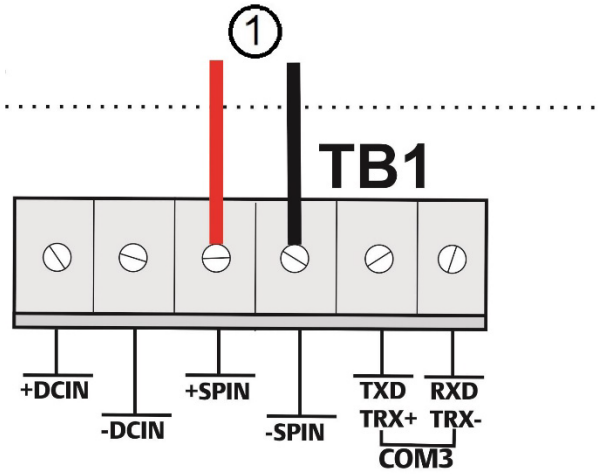

1 To solar panel

Restriction

The solar panel and lead acid battery combination cannot be used with ATEX/IECEx applications.

2.12.5 Adjusting the Optional Solar Panel Tilt Angle

⚠ DANGER

EXPLOSION HAZARD: Ensure the area in which you perform this operation is non-hazardous. Performing this operation in a hazardous area could result in an explosion.

The mounting brackets allow you to adjust the solar panel for maximum solar exposure. You can adjust the swivel of the panel by adjusting the U-bolt.

Figure 2-24: Adjusting Solar Panel Tilt Angle

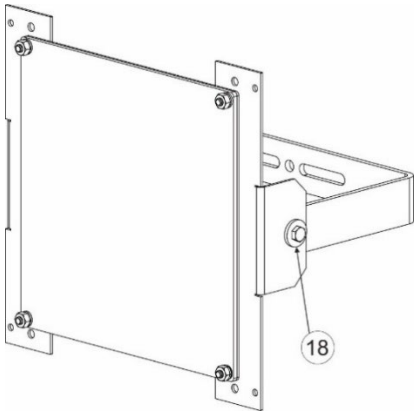

18 Tilt angle adjustment

- Point the solar panel surface due south (in the northern hemisphere) or due north (in the southern hemisphere) at an angle determined by the latitude of the site. *Table 2-6* shows the

angle (from horizontal) at which you should install the solar panel to maximize annual energy output. At most latitudes, you can improve performance by reducing the angle during the summer and increasing the angle during the winter. If no seasonal adjustments in panel direction are needed, then adjust the position for the worst-case December-February angle.

- Solar insolation is the amount of solar energy in hours received each day by an optimally tilted panel during the worst month of the year. An insolation rating of one hour means that the site, on average, would receive one hour of solar energy at the panel's rated power level (1000W/m2 per day). This rating varies from less than one hour in northern Canada to more than six hours in the Sahara Desert.

Table 2-6: Solar Panel Tilt Angle

Latitude	Installation Angle
0 to 4°	10° from horizontal
5 to 20°	Add 5° from the local latitude
21 to 45°	Add 10° from the local latitude
46 to 65°	Add 15° from the local latitude
66 to 75°	80° from horizontal

2.13 Connecting Communication Ports

⚠ DANGER

EXPLOSION HAZARD: Ensure the area in which you perform this operation is non-hazardous. Performing this operation in a hazardous area could result in an explosion.

The communication ports allow you either to connect to a PC or laptop running FBxConnect software or to other devices.

Access the three serial communication ports on the terminal plate under the rear cover. Route communication cables through the conduit fittings and connect the cables on the terminal plate.

2.13.1 Connecting to COM1

COM1 can be configured for RS-232, RS-485 (2-wire) or RS484/422 (4-wire) communications.

When connecting COM1 to another device using **RS-232**, use a cable with configurations as shown in *Figure 2-25*:

Figure 2-25: Connecting a Device to COM1 Using RS-232

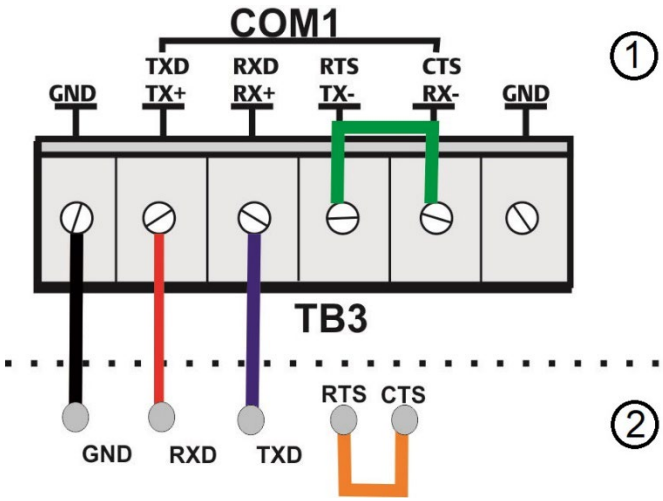

1 RS-232 port (COM1) on FB device
2 RS-232 port on external device

When connecting COM1 to another device using **RS-485/422 (4-wire)** use a cable with configurations as shown in *Figure 2-26*:

Figure 2-26: Connecting a Device to COM1 Using RS-485/422 (4-wire)

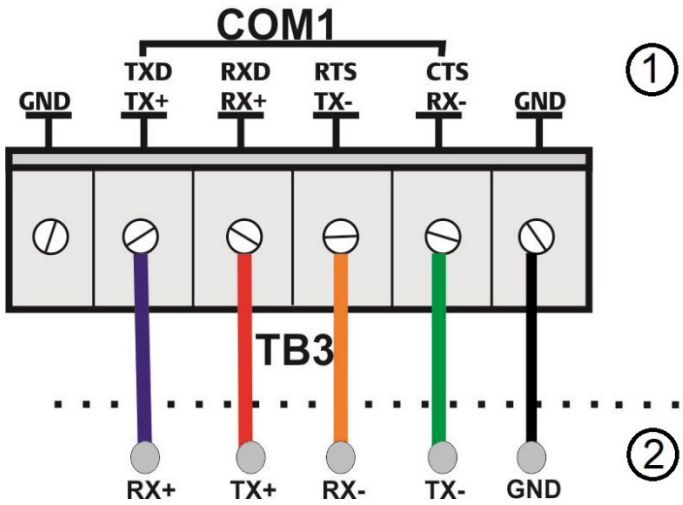

1 RS-485/422 (4-wire) port (COM1) on FB device
2 RS-485/422 (4-wire) port on external device

When connecting COM1 to another device using **RS-485 (2-wire)**, use a cable with configurations as shown in *Figure 2-27*:

Figure 2-27: Connecting a Device to COM1 Using RS-485 (2-wire)

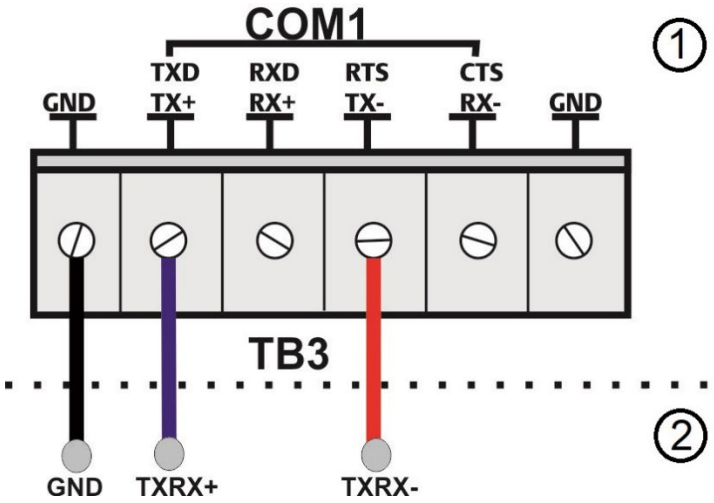

1 RS-485 (2-wire) port (COM1) on FB device
2 RS-485 (2-wire) port on external device

Regardless of the interface standard (RS-232, RS-485 [2-wire] or RS485/422 [4-wire]), you must use FBxConnect to configure the port for proper usage.

2.13.2 Connecting to COM2 and COM3

COM2 and COM3 operate identically. Each can be configured for either RS-232 or RS-485 (2-wire) communication.

When connecting COM2 or COM3 to an **RS-232** port on another device (a PC or another controller/flow computer) use a cable with configurations as shown in *Figure 2-28*.

Note
Neither COM2 nor COM3 has its own GND terminal. Use either GND terminal on the COM1 terminal block.

Figure 2-28: Connecting a Device to COM2 or COM3 Using RS-232

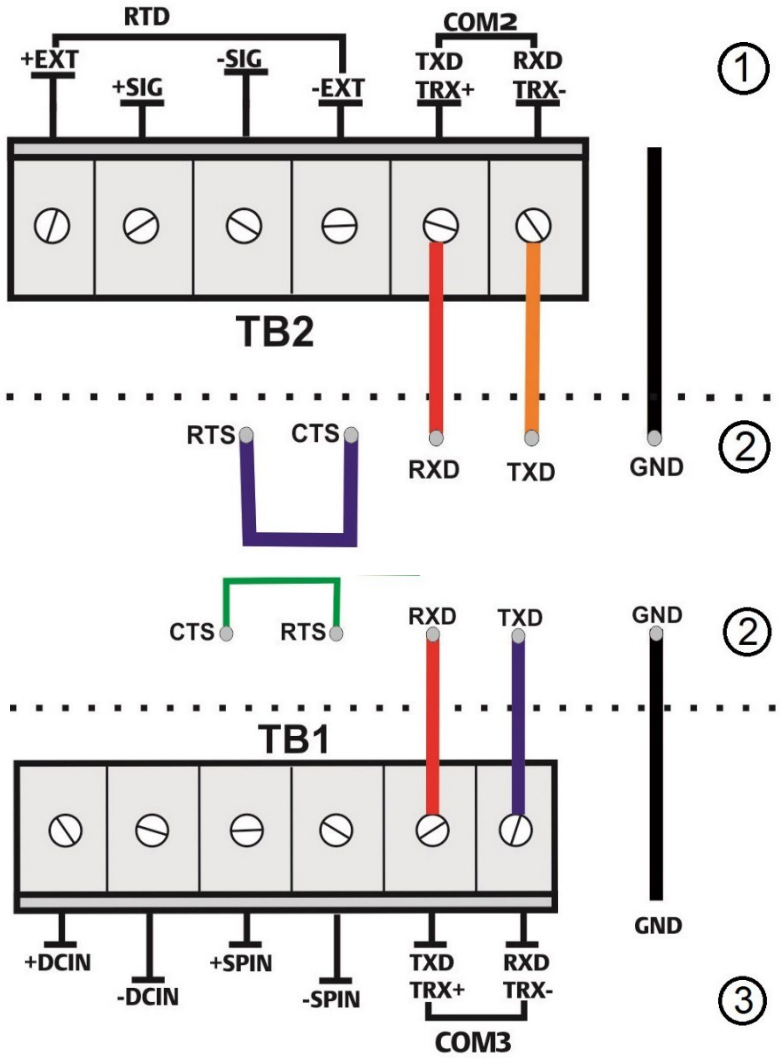

1 RS-232 port (COM2) on FB device
2 RS-232 port on external device
3 RS-232 port (COM3) on FB device

When connecting COM2 or COM3 to an **RS-485** (2-wire) port on another device (for example, a transmitter), use a cable with configurations as shown in *Figure 2-29*.

Note
Neither COM2 nor COM3 has its own GND terminal. Use either GND terminal on the COM1 terminal block.

Figure 2-29: Connecting a Device to COM2 or COM3 Using RS-485 (2-wire)

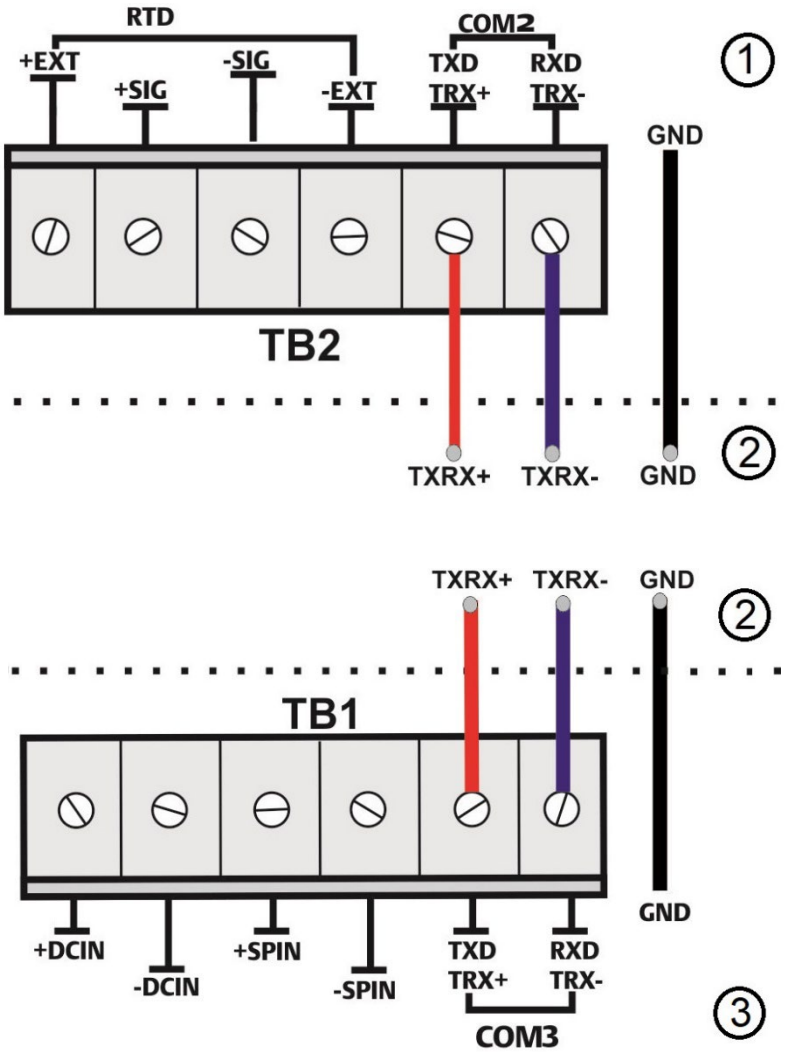

1 RS-485 port (2-wire) (COM2) on FB device
2 RS-485 port (2-wire) on external device
3 RS-485 port (2-wire) (COM3) on FB device

Regardless of the interface standard (RS-232 or RS-485 2-wire), you must use FBxConnect to configure the port for proper usage.

2.14 Connecting the RTD

⚠ DANGER

EXPLOSION HAZARD: Ensure the area in which you perform this operation is non-hazardous. Performing this operation in a hazardous area could result in an explosion.

RTD connections reside on the terminal plate under the rear cover. The flow computer supports 2-wire, 3-wire, and 4-wire operation for a PT100 RTD. Route the RTD cable through the conduit fittings and connect them on the terminal plate (as shown on *Figure 2-30*).

Note

The device defaults to the 4-wire RTD configuration; you can change this setting in FBxConnect.

Figure 2-30: Wiring for 2-Wire, 3-Wire, and 4-Wire RTD

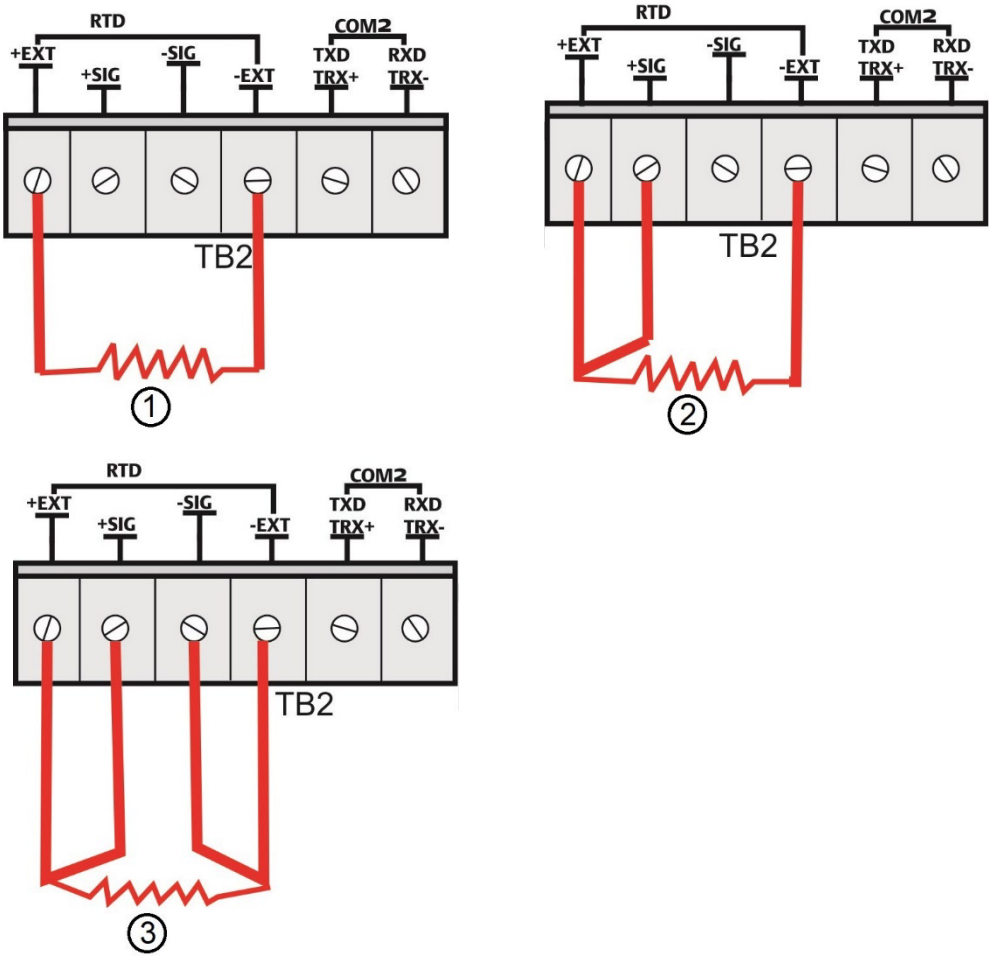

1 2-Wire RTD
2 3-Wire RTD
3 4-Wire RTD

2.15 Wiring the Digital Output

DANGER

EXPLOSION HAZARD: Ensure the area in which you perform this operation is non-hazardous. Performing this operation in a hazardous area could result in an explosion.

The digital output connection is on the terminal plate under the rear cover. Route the DO wires through the conduit fittings and connect them on the terminal plate. There is one connection for the DO and another for ground.

Note

When using the digital output to drive an inductive load (such as a relay coil), place a suppression diode across the load. This protects the DO from the reverse Electro-Motive Force (EMF) spike generated when the inductive load is switched off.

Figure 2-31: Wiring the External Powered DO

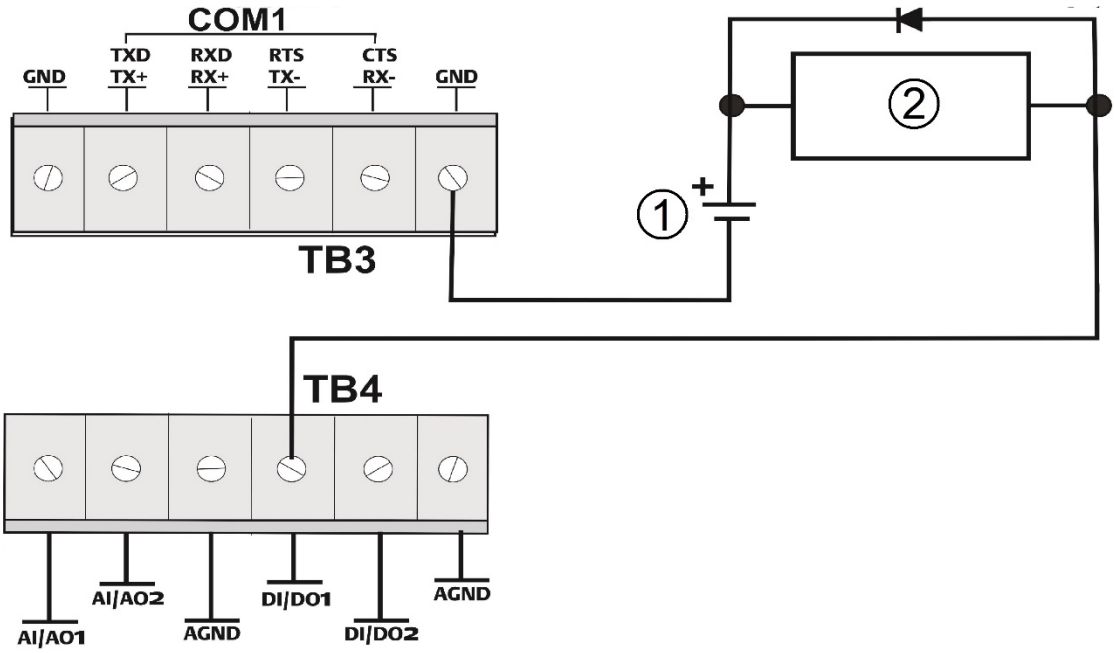

1 30Vdc (max)
2 500 mA Max Load

Section 3: Operation

This section covers the following topics:

- Powering Up/Powering Down the Device
- Establishing Communications
- Communicating using the HMI Module

This section describes day-to-day operation of the flow computer including how to turn it on and off and how to communicate with it.

3.1 Powering Up/Powering Down the Device

⚠ DANGER

Do not attempt to connect or disconnect power from the unit in a hazardous area. Ensure the area is non-hazardous. Failure to do so could result in an explosion.

1. Remove the front end cap.
2. Terminal block TB1 includes connections for DC power (+DCIN, -DCIN) and solar power (+SPIN, -SPIN). Battery power (which is also used with solar power) has its own internal connections.
   - Plug in TB1 to activate DC or solar power. If your device uses an internal battery and it is not connected, connect it as discussed in *Section 2.12.2 Connecting Battery Power.*
   - Unplug TB1 to deactivate DC or solar power. If your device uses an internal battery, disconnect the main battery.

This turns on (or shuts off) power from either an external power supply or the battery pack/solar panel.

Note

When you turn power on, the backlight on the HMI module lights, momentarily turns off and then remains lit while the INPUT LED blinks. After approximately one minute the initialization process finishes and the HMI starts to display live data.

3.2 Establishing Communications

The flow computer supports three ways to establish communications: through the host SCADA system, through a local laptop computer running FBxConnect, or through the HMI module.

3.2.1 Communicating with the SCADA Host

Communication to the flow computer through a SCADA host computer requires you to configure the host computer software, which varies depending upon whether you are using OpenEnterprise

or another host software package. Much of this configuration is beyond the scope of this topic, but no matter which host you are using, there are certain steps you must take:

1. Decide how the SCADA host should communicate with the flow computer. This could be through connection with one of the communication ports. A serial port connection could be a cable directly connected to the SCADA host or there could be intermediate connections through a radio or modem.

2. Decide which communication protocol you will use. This could be DNP3, ROC, or BSAP. See these documents for more information:
   - *Emerson FB Flow Computer DNP3 Protocol Specifications Manual* (D301806X012)
   - *ROC Protocol Specifications Manual for (for Emerson FBx-series)* (D301828X012)
   - *BSAP Communication Guide for FB1000/FB2000 Series Flow Computers* (D301808X012)

3. Provide the SCADA host with information about the various parameters it needs to extract from the application running in the flow computer. Typically, the SCADA host software includes a utility that allows you to identify this information so it can be incorporated into the database at the SCADA host.

4. Using whatever human-machine interface (HMI) tools exist for the SCADA host, create graphical displays or reports that include the parameters from the application required for successful operator interaction (setpoints, flow variables and so on).

3.2.2 Communicating with a Laptop Using One of the Serial Ports

To communicate with a laptop using a serial port:

- Your laptop must have Field Tools software with FBxConnect software installed.
- You must know a valid username/password combination for the flow computer.
- If the flow computer is not awake, you must wake it up first. (See *Section 3.3*)

⚠ DANGER

EXPLOSION HAZARD: Ensure the area in which you perform this operation is non-hazardous. Performing this operation in a hazardous area could result in an explosion.

1. Connect a cable between a serial port (or serial/USB adapter) on your laptop and port COM2 on the flow computer.

2. Launch Field Tools and add a new serial connection for this device; this launches FBxConnect configuration software. (If you already have an existing saved serial connection for this device in Field Tools, just double-click on it in the Connections list.)

3. Log into the flow computer if prompted.
4. Use the FBxConnect configuration software to view or change any desired parameters.
5. When finished, log off the flow computer and disconnect the cable from its serial port.

3.2.3 Communicating with a Laptop Wirelessly with FBxWifi

You must have purchased the flow computer with the optional FBxWifi communications feature to connect to a laptop PC wirelessly. Additionally:

- Wi-Fi® must be configured and working on your laptop PC.
- Your laptop PC must have Field Tools software with FBxConnect installed.
- You must know a valid username/password combination for the flow computer.
- You must know the name of the wireless network and the security key required to connect to it.
- Your laptop PC must be within line-of-sight with either the front display of the flow computer or of an external antenna for the FBxWifi communications module.
- If the flow computer is not awake, you must wake it up first. (See Section 3.3)

⚠ WARNING

Ensure that you and your laptop PC are in a non-hazardous area.

1. Launch Field Tools software and add a new wireless connection. (If you already have a saved wireless connection for this device in Field Tools, double-click on the device in the Connections list and skip to Step 4.)
2. Select the wireless network to which the flow computer belongs and enter the appropriate security key.
3. Click **Connect** to start the FBxConnect software.
4. Log into the flow computer if prompted.
5. Use the FBxConnect software to view or change any desired parameters.
6. When finished, log off the flow computer and disconnect from the wireless network.

3.3 Communicating using the HMI Module

You must have purchased the flow computer with the HMI module version that includes the optional display. Not all models include the display. Units without the display still include a button to wake up the device and status LEDs.

Notes

- If the device is configured to require logins to view data, you must know a valid username/password combination for the flow computer.
- To conserve power, the HMI module enters sleep mode after a period of inactivity. Sleep mode disables FBxWifi communication. In FBxConnect, you can configure the number of minutes of inactivity triggering sleep mode through the LCD Sleep Time parameter. Setting this parameter to 0 disables sleep mode which keeps the HMI module on but uses significantly more power.

The operator “awakens” the device by holding a finger against the front cover glass over the Hold to Wake button (the left-most button) for typically five to ten seconds. You can also pre-define a number of automatic wake-up times during the day from the Power Control screen in FBxConnect.

To temporarily keep the HMI module out of sleep mode, maintain an active FBxConnect connection. So long as communications remain active, the HMI module does not sleep.

1. Go to the front of the flow computer and touch your finger on the glass above the **Hold to Wake** button until the display lights up. (This may take several seconds.)

Figure 3-1: Waking the Display

2. If prompted, login using a valid username/password combination (Data Entry Mode). For information on how the buttons work, see *Table 3-1*.

3. The display enters Screen Saver Mode where it sequentially presents a series of screens showing details about the meter run flow rates, totals, and current process variables.

Figure 3-2: Infrared (IR) Button Location

1 Left Infrared (IR) Button
2 Down Infrared (IR) Button
3 Up Infrared (IR) Button
4 Right Infrared (IR) Button

Note

When using the IR buttons, aim your finger at the round spot just below the arrow.

Table 3-1: Infrared (IR) Buttons on HMI Module

Button	Mode	Use
OR	Screen Saver	▪ Tap once to move up or down one item through list of parameters. ▪ Hold to stay on current parameter.
	Data Entry	▪ Tap (UP) once to move the cursor to the previous character in the list or (DOWN) once to move the cursor to the next character in the list.Hold (UP) or (DOWN) to scroll more quickly through the character list.
	Idle Mode	Hold to wake the display (if screen is off)
	Screen Saver	Log out (if logged on)
	Data Entry	▪ Tap once to move the cursor to the left.Hold to perform action shown on screen (such as “Hold to Accept”)
	Data Entry	▪ Tap once to move the cursor to the right.Hold to perform action shown on screen (such as “Hold to Cancel”)

Symbol(s) representing the status of a value may appear in the upper right of the display next to the description. Multiple symbols may display. If there are no data quality issues, no symbols display.

Table 3-2: Symbols on Display

Symbol	Meaning
🔔	**Alarm**: The parameter value shown is in an alarm state (such as High Alarm, Low Alarm, etc.).
*	**Override**: The parameter value shown is in override mode (that is, a user-entered fixed value).
!	**Fault**: The parameter value shown is somehow invalid.
?	**Unverified**: For parameter values that require additional validation (beyond simple database min/max range checking), the firmware has not yet validated the parameter value shown.

Section 4: Service and Troubleshooting

This section covers the following topics:

- Returning the Unit for Repairs
- Interpreting the Status LEDs
- Switch and Buttons
- Removing/Replacing the HMI Module
- Replacing the Main Battery Pack
- Removing/Replacing the SRAM Battery
- Upgrading System Firmware

To maintain hazardous location certifications, you can only replace components in the field with the exact same part so that the model string on the data plate remains correct. This means you cannot add any hardware not reflected in the model string or upgrade a hardware component to a newer version; any such upgrades are prohibited and void the hazardous location certification.

For a list of user serviceable parts contact your Emerson Remote Automation Solutions sales representative or Emerson Impact Partner.

This chapter describes the service tasks that everyone needs to know such as replacing batteries or installing a firmware upgrade. A separate series of field replacement guides covers major field replaceable components.

Any replacement not covered in this chapter or in the field replacement guides (such as adding or upgrading hardware or replacing sensors) can only be performed at an Emerson-authorized repair facility.

Important

Use **only** batteries supplied with the flow computer or sold by Emerson as spare parts for this flow computer. If you substitute a battery you obtain elsewhere you will void your certification unless it is the identical part from the same manufacturer as that supplied with the flow computer from Emerson.

Figure 4-1: FB1100 Flow Computer Components

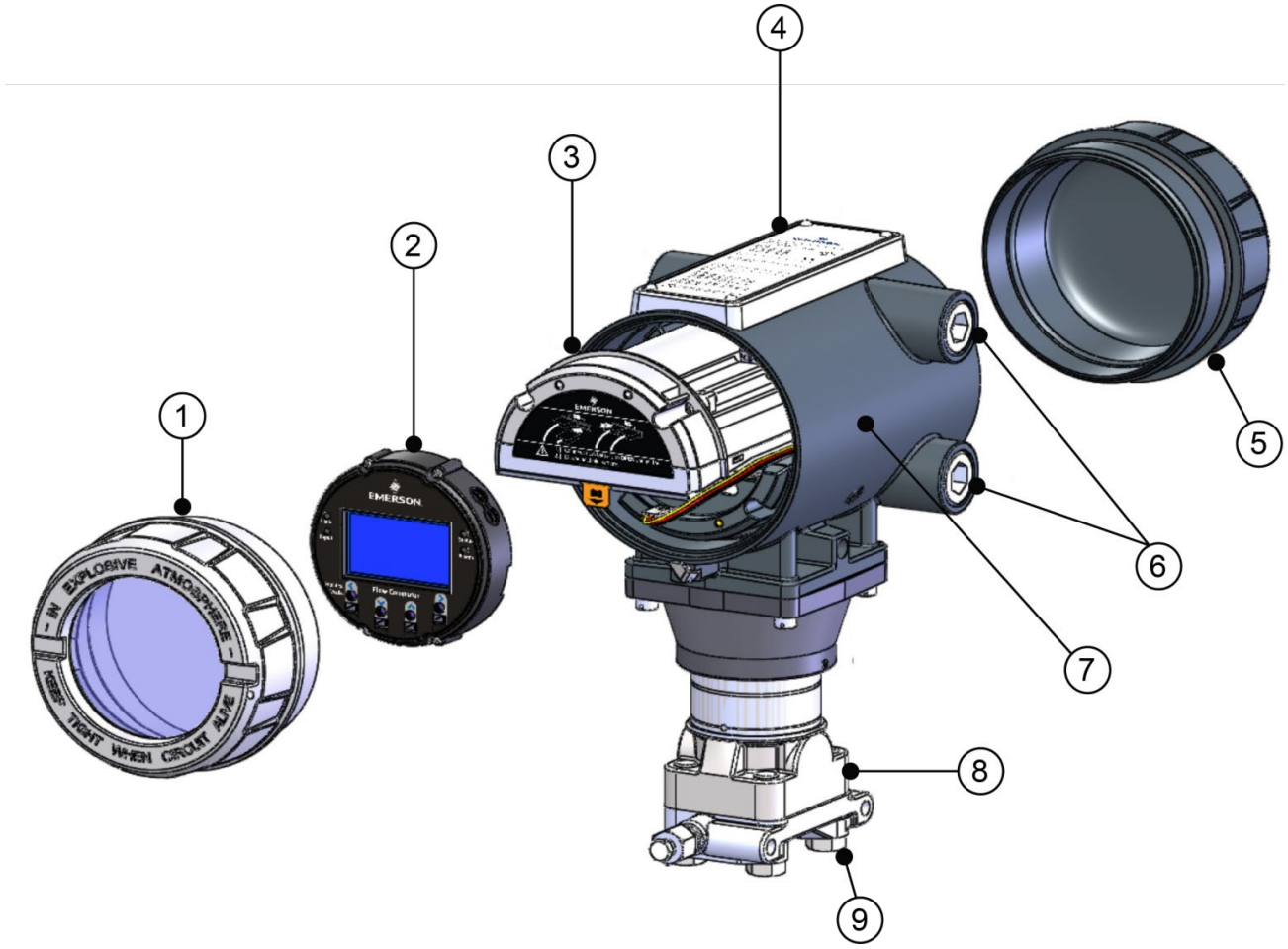

1 Front end cap (cover)
2 HMI module
3 Battery pack
4 Data plate
5 Rear end cap (cover)
6 Threaded ¾ in NPT to M20 x 1.5 conduit fitting (2 of 4 shown)
7 Housing/Enclosure
8 Sensor Module
9 Mounting hardware

4.1 Returning the Unit for Repairs

Only certain field replacement procedures are allowed under warranty and hazardous location certification. Other types of repairs cannot be performed in the field. In those cases, you must ship the unit to an Emerson-authorized repair facility. Contact Emerson Remote Automation Solutions for a return authorization number and instructions for where to ship the unit.

⚠ WARNING

International safety regulations restrict the shipment of lithium batteries. If you need to return the flow computer, remove the lithium battery before you ship the unit. Failure to remove the lithium battery may delay or prevent shipment of the flow computer.

4.2 Interpreting the Status LEDs

The flow computer display has four (4) status LEDs. The meaning of each LED varies depending upon the color displayed or whether the LED flashes.

Figure 4-2: LED Locations

1 Input LED
2 Link LED
3 Status LED
4 Alarm LED

Table 4-1: LED Descriptions

LED	Color/State	Meaning
Link LED	GREEN	An active wired Ethernet connection exists. Otherwise it is off. (FB1200/FB2200 only)
Input LED	GREEN	One of the IR buttons is being pressed.
	Flashing YELLOW	CPU booting or CPU has not yet recognized HMI module when HMI first powered on; goes off when recognized.
Status LED	GREEN	OK – Main power battery pack charged or not in use.
	Flashing RED	Main power battery pack low. Replace/re-charge lead acid battery pack soon. (If FB1100 Flow Computer with lithium battery pack– replace battery pack.)
	Flashing YELLOW	FB1100 Flow Computer with lithium battery pack only: Unit has switched to C cell battery internal to battery pack. Replace battery pack soon.
	Off	No power
	Flashing GREEN	Main power battery pack charging
Alarm LED	GREEN	No alarms.
	Flashing RED	HMI firmware update in progress.
	RED	Alarms are present.

Table 4-2: Special LED Sequences using Multiple LEDs

LED Sequence	Color/State
Link, Input, Status, and Alarm all solid RED	HMI module failed. Replace with spare or return for repairs.
Link and Alarm alternately flash RED; sequence repeats	CPU stuck in boot mode. Contact technical support.

Switch and Buttons

A momentary switch and two push-buttons on the HMI module provide trouble-shooting options for the flow computer.

⚠ DANGER

EXPLOSION HAZARD: Never remove end cap(s) in a hazardous location. Removing end cap(s) in a hazardous location could result in an explosion.

Table 4-3: Switch and Buttons

Button Name	Purpose	Procedure
SYSTEM RESET	Resets power. This momentary switch interrupts power to the flow computer to reset it. Used if system is powered on but is non-functional; this attempts a reboot.	Move the SYSTEM RESET switch either up or down. Unit powers off and then restarts.
A	Clears memory (SRAM). The SRAM memory holds current data values and pending alarm messages. If unit has unexpectedly stopped operating, you can depress this button on power-up to clear that information from memory (hard reset). Try this if a SYSTEM RESET alone does not work.	1. Press and hold the **A** button. 2. While continuing to hold the **A** button, move the SYSTEM RESET switch either up or down to initiate a reset. 3. Release the **A** button. The system clears SRAM during the power up sequence.
B	Currently undefined	None

4.4 Removing/Replacing the HMI Module

You do not need to power down the unit to replace the HMI module **if you are in a non-hazardous area**.

⚠ DANGER

Ensure the flow computer is in a non-hazardous area. Never remove/replace the HMI module in a hazardous area.

Important
The HMI module includes the FBxWifi transceiver; once you remove the HMI module; Wi-Fi communication with the flow computer ceases.

1. Remove the retaining clamp from the front end cap (if present). (See *Section 2.6.1*)
2. Unscrew the front end cap.
3. Loosen the four captive fastening screws on the HMI module.

Figure 4-3: Captive Fastening Screws

4. Grasp the HMI module and remove it by gently pulling it straight out away from the unit.
5. To replace the HMI module, line up the printed circuit board (PCB) with the slot on the back and gently press it back on. Tighten the four captive fastening screws.
6. Replace the end cap. Screw the end cap clockwise (eight full turns) until it is tightly sealed to the enclosure. Re-attach the retaining clamp, if applicable (see *Section 2.6.1*).

4.5 Replacing the Main Battery Pack

Periodically you must replace the main battery pack. FBxConnect provides a battery life indicator to show the number of days in use. In addition, if you use a lithium battery for main power, the Status LED shows yellow when the battery is low and needs to be replaced.

⚠ WARNING

If lead acid battery voltage falls below **4.7V**, the battery can no longer be recharged, and the charging system considers the battery dead. **You must replace the battery**.

Figure 4-4: Main Battery Pack

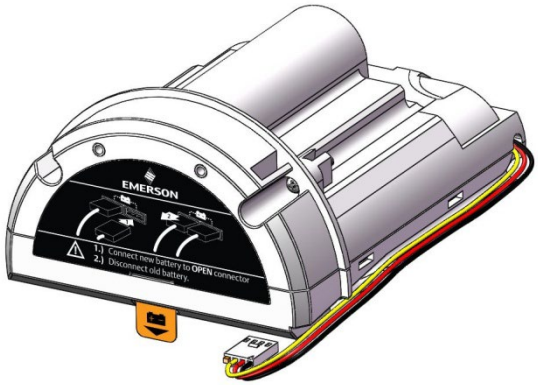

The device provides two battery connectors, enabling you to hot-swap the battery pack in a non-hazardous location. Slide out the first battery pack (leaving it connected), attach the new battery to the second (available) connector (so both batteries are connected), and then disconnect the old battery pack.

⚠ DANGER

EXPLOSION HAZARD: Ensure the area in which you perform this operation is non-hazardous. Performing this operation in a hazardous area could result in an explosion.

⚠ DANGER

EXPLOSION HAZARD: Do not disconnect equipment unless power has been removed or the area is known to be non-hazardous.

⚠ DANGER

EXPLOSION HAZARD: Substitution of any components may impair suitability for Class I, Division 1 or Class I, Division 2.

⚠ DANGER

EXPLOSION HAZARD: Do not replace batteries unless power has been switched off or the area is known to be non-hazardous. Batteries must only be changed in an area known to be non-hazardous.

⚠ WARNING

There are **no** user-serviceable parts inside the battery pack. Do not open the battery pack as you may damage the battery pack or injure yourself.

Note

Use these cells **only** in devices where a trained technician is responsible for servicing the cell circuit and replacing the lithium cells.

Restriction

Battery packs **cannot** be used with ATEX or IECEx applications.

Keep the replacement battery pack handy during the procedure.

1. Remove the retaining clamp from the front end cap (if present). (See *Section 2.6.1*)
2. Remove the front end cap.
3. Loosen the two bottom captive fastening screws on the HMI module. Leave the two top screws connected to the battery pack.
4. Grasp the HMI module and gently pull it and the battery pack out of the enclosure, leaving the battery still connected.

Figure 4-5: Removing the Battery Pack

5. Connect the new battery to the open connector. Route the wires so they are in the recessed area. Make sure the wires won't get caught in the end cap threads.
6. Disconnect the old battery pack's connector from the unit and set the old battery pack aside.
7. Slide the new battery pack into the unit.
8. Loosen the top captive fastening screws on the HMI module to separate it from the old battery pack.
9. Align the HMI module with the new battery pack and the tab on the CPU carrier board (bezel). Gently press the new battery pack on, being careful not to pinch the battery wires. Tighten all four screws.
10. Replace the end cap. Screw the end cap clockwise (eight full turns) until it is tightly sealed to the enclosure. Re-attach the retaining clamp, if applicable (see *Section 2.6.1*).

4.6 Removing/Replacing the SRAM Battery

A lithium coin cell battery provides backup power for the SRAM and the real time clock. The SRAM backup battery can last for up to 10,000 hours of cumulative operation and runs **only** if the main power system fails. In a non-hazardous area, you do not need to power down the unit to replace the SRAM backup battery.

Important

- If the unit is ever powered down without the SRAM battery installed, SRAM data is lost. Always back up your data **before** you remove the SRAM battery if you know that main power will also be off.
- Replacement SRAM backup batteries **must** be either the Rayovac® Model BR2335 **or** the Panasonic® Model BR2330.

DANGER

Ensure the flow computer is in a non-hazardous area. Never remove end caps in a hazardous area.

DANGER

Do not disconnect equipment unless power has been removed or the area is known to be non-hazardous.

DANGER

EXPLOSION HAZARD: Substitution of any components may impair suitability for Class I, Division 1 or Class I, Division 2.

DANGER

EXPLOSION HAZARD: Do not replace batteries unless power has been switched off or the area is known to be non-hazardous. Batteries must only be changed in an area known to be non-hazardous.

1. Remove the retaining clamp from the front end cap (if present). (See *Section 2.6.1*)
2. Remove the front end cap.
3. Remove the HMI module.
4. Grasp the coin cell battery and remove it from its slot.

Figure 4-6: Removing/Replacing the Coin Cell Battery

5. Insert the new coin cell battery in the slot. The positive side (+) must be on top.

⚠ CAUTION

When inserting the SRAM coin cell battery, push the battery gently into its slot until it stops. The battery should slide in easily. Do not use excessive force.

6. Replace the HMI module.
7. Replace the end cap. Screw the end cap clockwise (eight full turns) until it is tightly sealed to the enclosure. Re-attach the retaining clamp, if applicable (see *Section 2.6.1*).

4.7 Upgrading System Firmware

Periodically Emerson releases new system firmware for the flow computer to introduce new features or update system functions.

You must know a valid username/password combination for the flow computer to complete this process.

⚠ DANGER

EXPLOSION HAZARD: Ensure the area in which you perform this operation is non-hazardous. Performing this operation in a hazardous area could result in an explosion.

Important

- A power loss occurring during a firmware update to a unit with a dead SRAM coin cell battery can corrupt SRAM memory and place the flow computer in a continuous boot cycle, requiring you to return the device to the factory for repairs. To avoid this, be sure to replace the SRAM coin cell battery when its power is low. To check this in FBxConnect, click **Services > System Power** and look at the **SRAM Battery Status** field on the display.
- When upgrading system firmware version 01.*xx.xx.xx* to version 2.05.*xx.xx* or newer, allow up to 10 minutes to complete the upgrade and **do not** power cycle the unit.

1. Launch Field Tools and use FBxConnect to connect to the flow computer.

2. Click the **Services** tab, then click **Firmware Update**.

3. Click **Configuration Save** to save the flow computer's configuration.

4. Click **History Collection** to save the historical data contained in the flow computer.

5. Click **Firmware Update**.

6. In the Firmware Update dialog box, click **Browse** and navigate to the zip file containing your new system firmware. The grid updates with details of the firmware version currently in the device, and the firmware version in the zip file.

Figure 4-7: Firmware Update Dialog Box

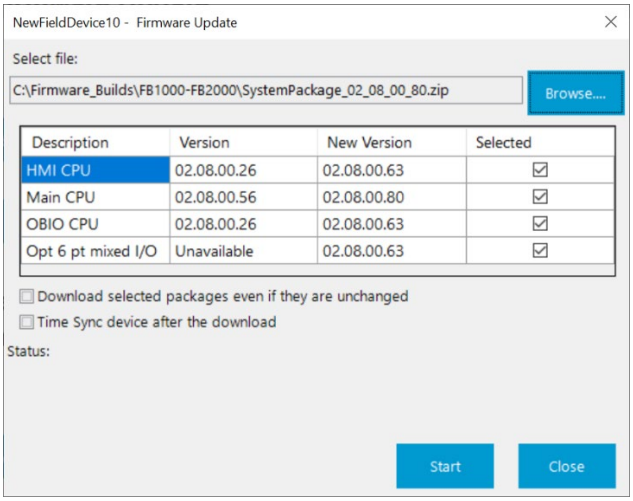

7. Select the checkbox in the Selected column to choose the firmware. If you are downloading the same version that is already installed on the device, select **Download Even If Unchanged**.

8. Select **Time Sync device after the download** if you want to sychronize the flow computer's clock with your PC clock after the download completes.

9. Click **Start** to begin the firmware download. Allow the download to proceed to completion. If you choose to cancel the firmware download before it completes, the system restores the current version already in the device.

Appendix A: Special Instructions for Class I Division 2 Locations

1. The Emerson FB1100 Flow Computer is listed by Underwriters Laboratories (UL) as non-incendive and is suitable for use in Class I, Division 2, Groups A, B, C and D hazardous locations or non-hazardous locations. Read this appendix carefully before installing a non-incendive Emerson FB1100 Flow Computer. Refer to the other chapters of this manual for general information. In the event of a conflict between the other chapters of this manual and this appendix, always follow the instructions in this appendix.
2. The Emerson FB1100 Flow Computer includes both non-incendive and unrated field circuits. Unless a circuit is specifically identified in this appendix as non-incendive, the circuit is unrated. Unrated circuits must be wired using wiring methods as specified in Article 501-4(b) of the National Electrical Code (NEC), NFPA 70 for installations in the United States, or as specified in Section 18-152 of the Canadian Electrical Code for installation in Canada.
3. All communication ports terminate on the terminal plate within the enclosure. Wiring to the connectors is unrated. No connections may be made to communication ports unless the user ensures that the area is known to be nonhazardous. Connections to the "Local Port" are temporary and must be short in duration to ensure that flammable concentrations do not accumulate while it is in use.
4. An RTD may be supplied with the Emerson FB1100 Flow Computer. Connection to the RTD is approved as a non-incendive circuit so that Division 2 wiring methods are not required.
5. I/O connections are unrated and must be wired using Division 2 wiring methods.

⚠ DANGER

EXPLOSION HAZARD: Do not disconnect equipment unless power has been removed or the area is known to be non-hazardous.

⚠ DANGER

EXPLOSION HAZARD: Substitution of any components may impair suitability for Class I, Division 1 or Class I, Division 2.

⚠ DANGER

EXPLOSION HAZARD: Do not replace batteries unless power has been switched off or the area is known to be non-hazardous. Batteries must only be changed in an area known to be non-hazardous.

Figure A-1: Data Plate (No Battery) – Class I Division 2 Non-incendive (UL)

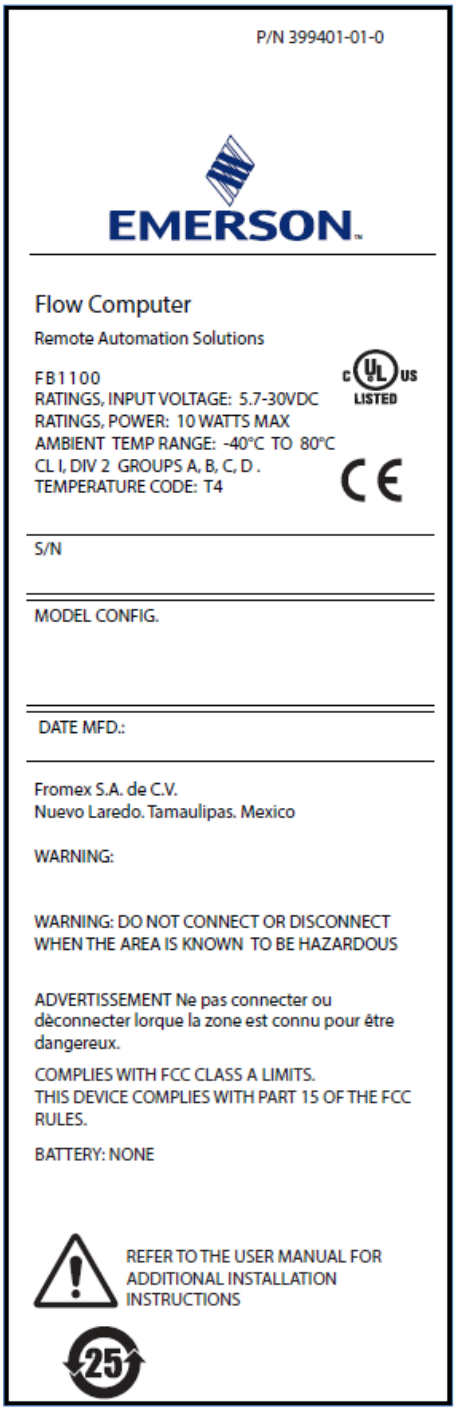

Figure A-2: Data Plate (Lead Acid Battery) – Class I Division 2 Non-incendive (UL)

P/N 399403-01-0

EMERSON™

Flow Computer

Remote Automation Solutions

FB1100
RATINGS, INPUT VOLTAGE: 5.7-30VDC
RATINGS, POWER: 10 WATTS MAX
AMBIENT TEMP RANGE: -40°C TO 80°C
CL I, DIV 2 GROUPS A, B, C, D .
TEMPERATURE CODE: T4

c UL us LISTED

CE

S/N

MODEL CONFIG.

DATE MFD.:

Fromex S.A. de C.V.
Nuevo Laredo. Tamaulipas. Mexico

WARNING:
EXPLOSION HAZARD-BATTERIES MUST ONLY BE CHANGED IN AN AREA KNOWN TO BE NON-HAZARDOUS .

WARNING: DO NOT CONNECT OR DISCONNECT WHEN THE AREA IS KNOWN TO BE HAZARDOUS

AVERTISSEMENT: EXPLOSION BATTERIES DE DANGER ne doit être changè dans une règion connue comme non dangereux.

ADVERTISSEMENT Ne pas connecter ou dèconnecter lorque la zone est connu pour être dangereux.

COMPLIES WITH FCC CLASS A LIMITS.
THIS DEVICE COMPLIES WITH PART 15 OF THE FCC RULES.

BATTERY - LEAD ACID PACK: 6.0 VDC 4.5 Ah
P/N 399457-00-0

REFER TO THE USER MANUAL FOR ADDITIONAL INSTALLATION INSTRUCTIONS

25

Figure A-3: Data Plate (Lithium Battery) – Class I Division 2 Non-incendive (UL)

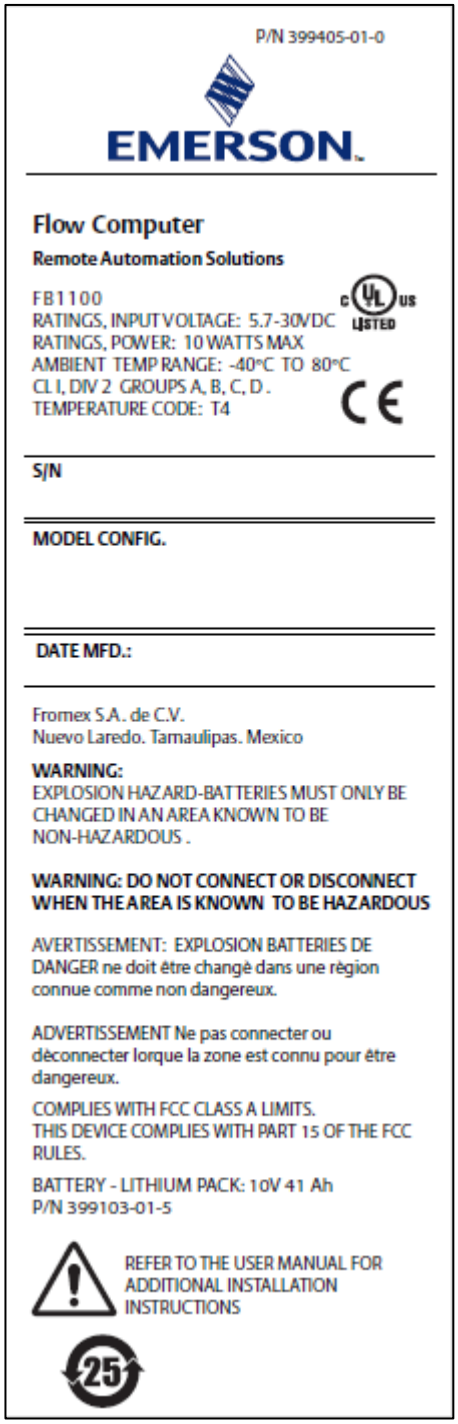

P/N 399405-01-0

EMERSON

Flow Computer

Remote Automation Solutions

FB1100
RATINGS, INPUT VOLTAGE: 5.7-30VDC
RATINGS, POWER: 10 WATTS MAX
AMBIENT TEMP RANGE: -40°C TO 80°C
CL I, DIV 2 GROUPS A, B, C, D .
TEMPERATURE CODE: T4

S/N

MODEL CONFIG.

DATE MFD.:

Fromex S.A. de C.V.
Nuevo Laredo. Tamaulipas. Mexico

WARNING:
EXPLOSION HAZARD-BATTERIES MUST ONLY BE CHANGED IN AN AREA KNOWN TO BE NON-HAZARDOUS .

WARNING: DO NOT CONNECT OR DISCONNECT WHEN THE AREA IS KNOWN TO BE HAZARDOUS

AVERTISSEMENT: EXPLOSION BATTERIES DE DANGER ne doit être changè dans une règion connue comme non dangereux.

ADVERTISSEMENT Ne pas connecter ou dèconnecter lorque la zone est connu pour être dangereux.

COMPLIES WITH FCC CLASS A LIMITS.
THIS DEVICE COMPLIES WITH PART 15 OF THE FCC RULES.

BATTERY - LITHIUM PACK: 10V 41 Ah
P/N 399103-01-5

REFER TO THE USER MANUAL FOR ADDITIONAL INSTALLATION INSTRUCTIONS

Appendix B: Special Instructions for Class I Division 1 Locations

1. The Emerson FB1100 Flow Computer is listed by Underwriters Laboratories (UL) as explosion proof and is suitable for use in Class I, Division 1, Groups C and D hazardous locations or non-hazardous locations. Read this appendix carefully before installing an Emerson FB1100 Flow Computer. Refer to the other chapters of this manual for general information. In the event of a conflict between the other chapters of this manual and this appendix, always follow the instructions in this appendix.
2. The Emerson FB1100 Flow Computer includes both non-incendive and unrated field circuits. Unless a circuit is specifically identified in this appendix as non-incendive, the circuit is unrated. Unrated circuits must be wired using wiring methods as specified in *Article 501-4(b)* of the *National Electrical Code (NEC), NFPA 70* for installations in the United States, or as specified in *Section 18-152* of the *Canadian Electrical Code* for installation in Canada.

⚠ DANGER

Though the Emerson FB1100 Flow Computer has a local port for local interrogation, it should not be accessed with the cover removed in a Class I Division 1 area unless it has first been verified that no flammable concentrations exist in that area. The local port may be wired through a conduit, using seals, to an unclassified or Division 2 area.

3. All communication ports terminate on the terminal plate within the enclosure. Wiring to the connectors is unrated. No connections may be made to communication ports unless the user ensures that the area is known to be nonhazardous. Connections to the "Local Port" are temporary and must be short in duration to ensure that flammable concentrations do not accumulate while it is in use.
4. An RTD may be supplied with the Emerson FB1100 Flow Computer. Connection to the RTD is approved as a non-incendive circuit.

Note

A bendable RTD (with a plastic bushing, as utilized in Division 2 installations) may not be used in a Division 1 area as it renders the area non-explosion proof. Use an RTD connection head and explosion-proof conduit for Division 1 installations.

5. I/O connections are unrated and must be wired using wiring methods as specified in *Article 501-4(b)* of the *National Electrical Code (NEC), NFPA 70* for installations in the United States, or as specified in *Section 18-152* of the *Canadian Electrical Code* for installation in Canada.

⚠ DANGER

EXPLOSION HAZARD: Do not disconnect equipment unless power has been removed or the area is known to be non-hazardous.

⚠ DANGER

EXPLOSION HAZARD: Substitution of any components may impair suitability for Class I, Division 1 or Class I, Division 2.

⚠ DANGER

EXPLOSION HAZARD: Do not replace batteries unless power has been switched off or the area is known to be non-hazardous. Batteries must only be changed in an area known to be non-hazardous.

Note

These cells are to be used only in devices where servicing of the cell circuit and replacement of the lithium cells will be done by a trained technician.

⚠ DANGER

The area must be known to be non-hazardous before servicing the unit and before installing or removing I/O wiring.

Figure B-1: Data Plate (No Battery) – Class I Division 1 Explosion Proof (UL)

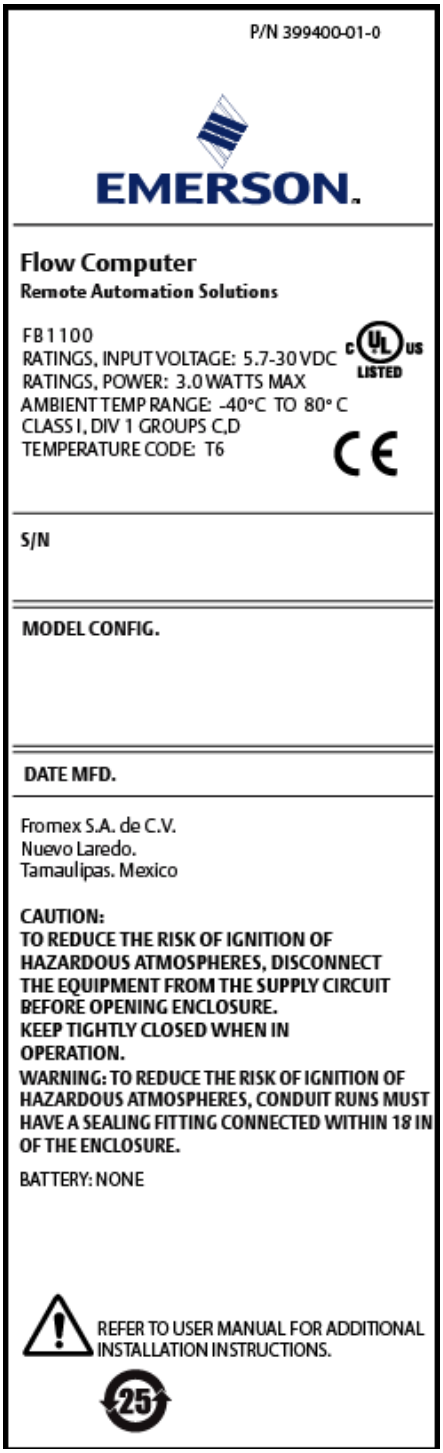

P/N 399400-01-0

EMERSON.

Flow Computer
Remote Automation Solutions

FB1100
RATINGS, INPUT VOLTAGE: 5.7-30 VDC
RATINGS, POWER: 3.0 WATTS MAX
AMBIENT TEMP RANGE: -40°C TO 80° C
CLASS I, DIV 1 GROUPS C,D
TEMPERATURE CODE: T6

c UL us LISTED

CE

S/N

MODEL CONFIG.

DATE MFD.

Fromex S.A. de C.V.
Nuevo Laredo.
Tamaulipas. Mexico

CAUTION:
TO REDUCE THE RISK OF IGNITION OF HAZARDOUS ATMOSPHERES, DISCONNECT THE EQUIPMENT FROM THE SUPPLY CIRCUIT BEFORE OPENING ENCLOSURE.
KEEP TIGHTLY CLOSED WHEN IN OPERATION.
WARNING: TO REDUCE THE RISK OF IGNITION OF HAZARDOUS ATMOSPHERES, CONDUIT RUNS MUST HAVE A SEALING FITTING CONNECTED WITHIN 18 IN OF THE ENCLOSURE.

BATTERY: NONE

REFER TO USER MANUAL FOR ADDITIONAL INSTALLATION INSTRUCTIONS.

25

Figure B-2: Data Plate (Lead Acid Battery) – Class I Division 1 Explosion Proof (UL)

P/N 399402-01-0

EMERSON

Flow Computer
Remote Automation Solutions

FB1100
RATINGS, INPUT VOLTAGE: 5.7-30 VDC
RATINGS, POWER: 3.0 WATTS MAX
AMBIENT TEMP RANGE: -40°C TO 80°C
CLASS I, DIV 1 GROUPS C,D
TEMPERATURE CODE: T6

c UL us LISTED

CE

S/N

MODEL CONFIG.

DATE MFD.

Fromex S.A. de C.V.
Nuevo Laredo.
Tamaulipas. Mexico

CAUTION:
TO REDUCE THE RISK OF IGNITION OF HAZARDOUS ATMOSPHERES, DISCONNECT THE EQUIPMENT FROM THE SUPPLY CIRCUIT BEFORE OPENING ENCLOSURE.
KEEP TIGHTLY CLOSED WHEN IN OPERATION.

WARNING: TO REDUCE THE RISK OF IGNITION OF HAZARDOUS ATMOSPHERES, CONDUIT RUNS MUST HAVE A SEALING FITTING CONNECTED WITHIN 18 IN OF THE ENCLOSURE.

WARNING: BATTERY MUST ONLY BE CHANGED IN AN AREA KNOWN TO BE NON-HAZARDOUS.

BATTERY - LEAD ACID PACK: 6.0 VDC 2.9 Ah
SEALED P/N 399457-00-0

REFER TO USER MANUAL FOR ADDITIONAL INSTALLATION INSTRUCTIONS.

25

Figure B-3: Data Plate (Lithium Battery) – Class I Division 1 Explosion Proof (UL)

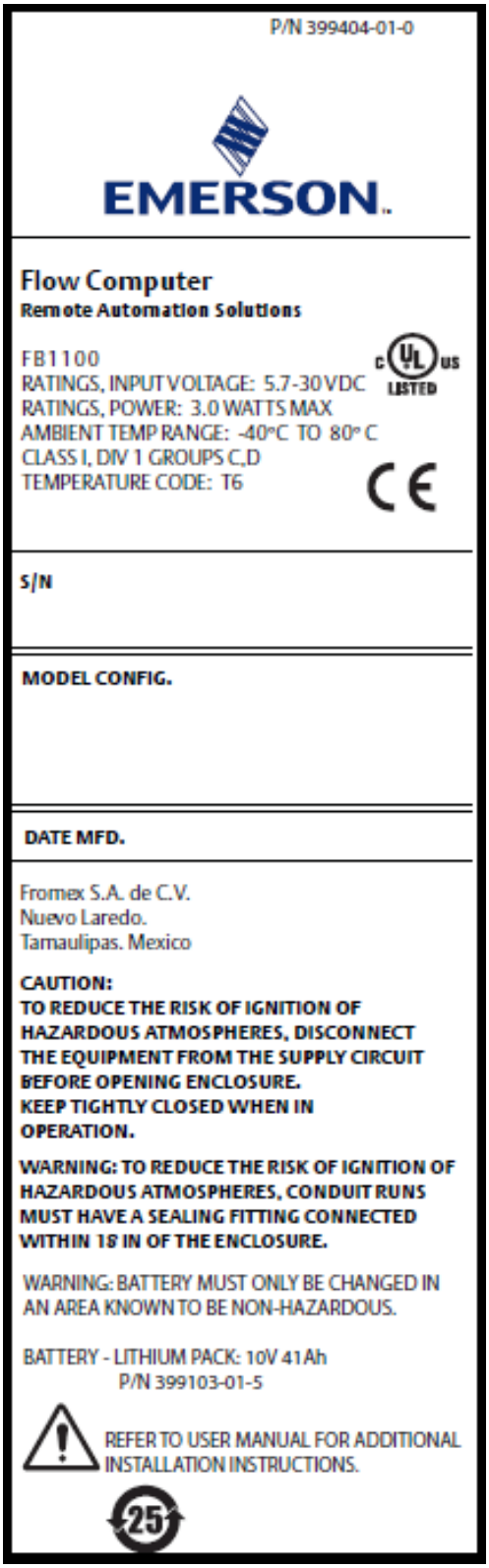
P/N 399404-01-0

EMERSON

Flow Computer
Remote Automation Solutions

FB1100
RATINGS, INPUT VOLTAGE: 5.7-30 VDC
RATINGS, POWER: 3.0 WATTS MAX
AMBIENT TEMP RANGE: -40°C TO 80° C
CLASS I, DIV 1 GROUPS C,D
TEMPERATURE CODE: T6

S/N

MODEL CONFIG.

DATE MFD.

Fromex S.A. de C.V.
Nuevo Laredo.
Tamaulipas. Mexico

CAUTION:
TO REDUCE THE RISK OF IGNITION OF HAZARDOUS ATMOSPHERES, DISCONNECT THE EQUIPMENT FROM THE SUPPLY CIRCUIT BEFORE OPENING ENCLOSURE.
KEEP TIGHTLY CLOSED WHEN IN OPERATION.

WARNING: TO REDUCE THE RISK OF IGNITION OF HAZARDOUS ATMOSPHERES, CONDUIT RUNS MUST HAVE A SEALING FITTING CONNECTED WITHIN 18' IN OF THE ENCLOSURE.

WARNING: BATTERY MUST ONLY BE CHANGED IN AN AREA KNOWN TO BE NON-HAZARDOUS.

BATTERY - LITHIUM PACK: 10V 41Ah
P/N 399103-01-5

REFER TO USER MANUAL FOR ADDITIONAL INSTALLATION INSTRUCTIONS.

Appendix C: ATEX Non-Sparking Zone 2 Certifications

This appendix includes notes on ATEX certifications. For full details, please refer to the *Emerson FB1100 Flow Computer Safe Use Instructions* (D301768X012).

Special Conditions of Use:

- Make provisions to ensure, in the event of transient disturbances, that the rated voltage does not exceed 140% of the peak rated voltage.
- Impact tests on the display were conducted based on Group II values for the low risk of mechanical danger, in accordance with Table 13 of both EN 60079-0:2012+A11:2013 and IEC 60079-0 6th Edition. Install flow computers with displays in areas where the risk of impact is low.
- Lithium Battery, Lead Acid Battery, and Solar Panel options are not for use in ATEX/ IECEx applications.
- For Zone 2 installation, take care to install and use the flow computer in such a way that excludes the danger of electrostatic charge.
- Refer to field replacement guides for replacement of the following parts:

Replacement Part	Kit Number	Field Replacement Guide document number:
End Caps	399122-01-0 and 399123016-KIT	D301814X012
HMI Module Display Assembly	399379-01-0, 621627011-KIT, 399380-01-0, 621627020-KIT	D301816X012
CPU Board	399134018-KIT	D301802X012
Termination Board and Terminal Block	399185-01-1, 400216010-KIT, 395791014-KIT 395803000-KIT	D301820X012
Sensor Assembly	Variable Kit Number	D301842X012
Coin Cell Battery	395620-03-1	D301854X012

This device was evaluated according to the following standards:

- *IEC 60079-0 6th Edition*
- *IEC 60079-15 4th Edition*
- *EN 60079-0 :2012+A11:2013*
- *EN 60079-15:2010*

Enclosure Rating: IP66

Terminal blocks for the FB1100 Flow Computer have the following characteristics:

- Terminal blocks can accommodate two conductors per channel.
- Stranded or solid wire allowed.
- Torque values: NM 0.5-0.6
- Wire size: 28-12 AWG (0.08 – 3.3 mm2); (0.32 – 2.05 mm)

Bristol Inc. d.b.a. Remote Automation Solutions
1100 Buckingham Street
Watertown, CT 06795 U.S.A.

Figure C-1: Data Plate – ATEX nA Non-Sparking

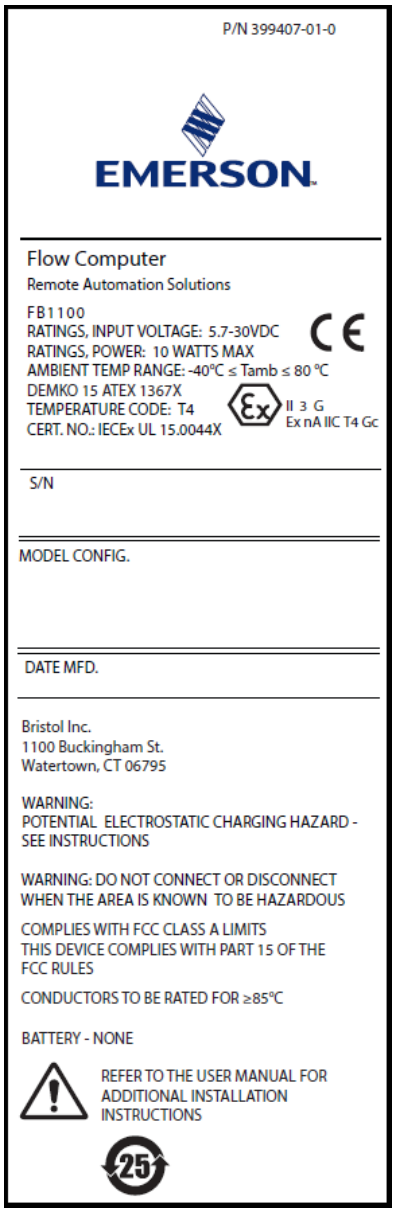

Appendix D: ATEX Flame-Proof Zone 1 Certifications

The data plate and certain conditions of use are shown below. For full details refer to the *Emerson FB1100 Flow Computer Safe Use Instructions* (D301768X012).

Figure D-1: Data Plate – ATEX Ex db Flame-proof

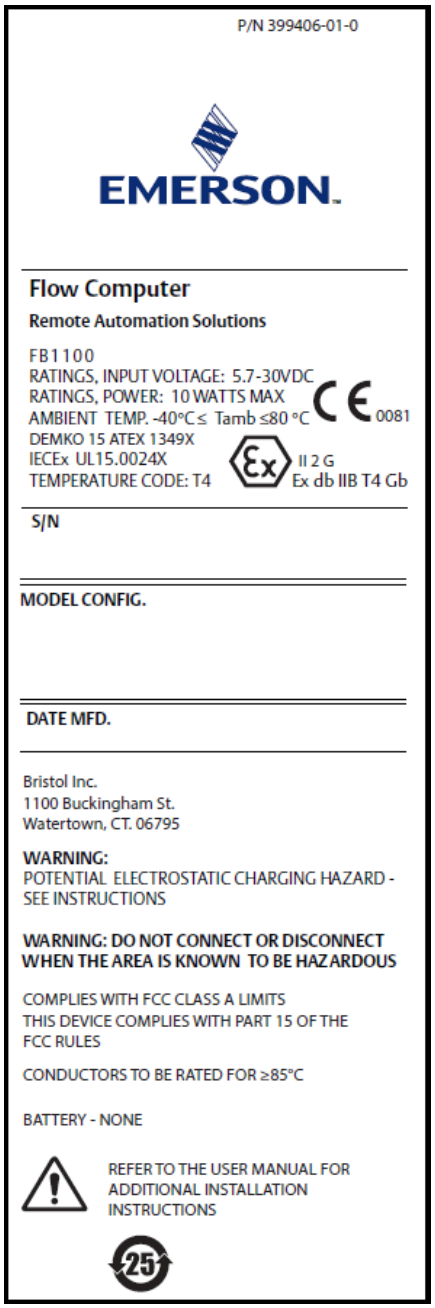

Special Conditions of Use / Schedule of Limitations:

- Contact your authorized sales and service representative for any maintenance or repair beyond the maintenance of the FB1100 Flow Computer. Do not alter or disassemble any of the flameproof joints of the FB1100 Flow Computer.
- The Model 4088 and Model 215 Scalable Pressure Transmitters provided with the FB1100 flow computers contain a thin-wall diaphragm. Installation, maintenance, and use must take into account the environmental conditions to which the diaphragm is subjected. Follow the manufacturer's instructions for installation and maintenance to ensure safety during the device's lifetime.
- Refer to field replacement guides for replacement of the following parts:

Replacement Part	Kit Number	Field Replacement Guide document number:
End Caps	399122-01-0 and 399123016-KIT	D301814X012
HMI Module Display Assembly	399379-01-0, 621627011-KIT, 399380-01-0, 621627020-KIT	D301816X012
CPU Board	399134018-KIT	D301802X012
Termination Board and Terminal Block	399185-01-1, 400216010-KIT, 395791014-KIT 395803000-KIT	D301820X012
Sensor Assembly	Variable Kit Number	D301842X012
Coin Cell Battery	395620-03-1	D301854X012

This device was evaluated according to the following standards:

- *IEC 60079-0, 6th Edition*
- *IEC 60079-1, 7th Edition*
- *EN 60079-0:2012+A11:2013*
- *EN 60079-1:2014*

Appendix E: Autonomous Mode Requirements

The FB1100 Flow Computer operating in "autonomous mode" runs off a single battery for up to 12 months without recharging. The 12-month battery life is based on the FB1100 running in low power mode on a typical remote application with a local collection of history and use of the optional display for up to 30 minutes per month. This configuration makes the FB1100 an ideal replacement for chart recorders, significantly reducing measurement uncertainty and providing a complete electronic audit trail. The 12-month battery life is achieved under an ambient temperature of 25°C/77°F; refer to *Table E-2*.

The solar powered option provides up to 25 days of autonomous operation without charge.

To achieve 12 months of autonomous operation, you **must** configure the FB1100 Flow Computer to meet the following requirements:

⚠ WARNING

If you exceed these requirements, the FB1100 Flow Computer **will not** achieve 12 months of autonomous operation.

Table E-1. Autonomous Mode Requirements

Category	Feature	Requirements	
Configuration	Averages	A total of 4 or less configured averages.	
	History	History Group 1 (User Periodic 1)	A total of 10 or less configured history points in History Group 1.
		History Group 2 (User Periodic 2)	A total of 0 configured history points in History Group 2.
		History Group 3 (General History)	A total of 0 configured history points in History Group 3.
		History Group 4 (Station History 1)	A total of 12 or less configured history points in History Group 4.
	Discrete Output	The discrete output **must** be disabled (Configure > I/O Setup > I/O Configuration > Properties Tab > Module Power Control).	
Communications	Limit communications via the LCD, FBxWifi™, or serial ports to 30 minutes per month or less. Usage exceeding 30 minutes per month impacts the life of the battery.		

Table E-2. Estimated Effect of Ambient Temperature on Battery Life

Ambient Temperature	Impact on Total Battery Life
25°C or 77°F	0%
–30°C or –22°F	Reduced by 23%
0°C or 32°F	Reduced by 19%
55°C or 131°F	Reduced by 34%
72°C or 161.6°F	Reduced by 38%

Index

A

Adjusting solar panel tilt angle 32
ATEX certification
  notes on Zone 1 71
  notes on Zone 2 69
Autonomous Measurement Mode 10, 73

B

Battery
  connecting 27
  low power status LED 50
  replacing the main battery pack 52
  replacing the SRAM battery 55
  shipping restrictions 49
Bolting 17
Buttons 51

C

Case
  rotating 21
Class I Division 1 63
Class I Division 2 59
COM1
  wiring 34
COM2
  wiring 35
COM3
  wiring 35
Communicating via the HMI module 43
Communication
  establishing 41
  to a laptop using a serial port 42
  to a laptop with wirelessly 43
  with SCADA Host 42
Communication ports
  connecting 33
  overview 7
Configuration software 9
Connecting
  battery 27
  power 25
  RTD 38
Coplanar mounting kit 20
Covers
  clamp 14
  removing 14, 15
  replacing 16
CPU 4

D

Daily operation 41
Digital output
  wiring 39
Direct mounting 19
Display
  replacing 51

E

Enclosure
  explosion-proof 4
  mounting 16
End caps
  removing 14, 15
  replacing 16
Environmental specifications 12
Explosion-proof Enclosure 4

F

FBxWifi 8, 43
Features 3
Figures
  1-1. FB1100 Flow Computer 2
  1-2. Retaining Clamps and Tie Holes for Tamper-resistant Seals 5
  1-3. HMI Module with LCD 8
  1-4. HMI Module without LCD 8
  1-5. External FBxWifi Antenna 9
  2-1. FB1100 Dimensions (w/Multivariable Sensor) 13
  2-2. Front End Cap (w/Retaining Clamp) 14
  2-3. Retaining Clamp in Place 15
  2-4. Retaining Clamp and Screw 15
  2-5. Removing/Tightening the End Cap with Prybar 15

2-6. Front and Rear End Caps 16
2-7. Removing Front and Rear End Caps 16
2-8. Transmitter with Coplanar Flange 17
2-9. Transmitter (w/Coplanar Flange & Optional Flange Adapters) 17
2-10. Transmitter (w/Traditional Flange & Optional Flange Adapters) 17
2-11. Bolt Installation 18
2-12. O-rings (w/Flange Adapters 19
2-13. Traditional Flange Mounting Kit 20
2-14. Coplanar Mounting Kit 20
2-15. Housing Rotation Set Screws 21
2-16. Ground Lug 22
2-17. Terminal Plate 23
2-18. DC Power Connections 26
2-19. Connecting the Battery Pack 27
2-20. Attaching Mounting Hardware to the Solar Panel 28
2-21. Integral mounted solar panel 29
2-22. Solar panel remote mounted (pole mounted) 31
2-23. Wiring Solar Power 32
2-24. Adjusting Solar Panel Tilt Angle 32
2-25. Connecting a Device to COM1 Using RS-23234
2-26. Connecting a Device to COM1 Using RS-485/422 4-wire 34
2-27. Connecting a Device to COM1 Using RS-485 (2-wire) 35
2-28. Connecting a Device to COM2 or COM3 Using RS-232 36
2-29. Connecting a Device to COM2 or COM3 Using RS-485 (2-wire) 37
2-30. Wiring for 2-, 3-, and 4-Wire RTD 38
2-31. Wiring for DO 39
3-1. Waking the Display 44
3-2. Infrared (IR) Button Location 45
4-1. FB1100 Flow Computer Components 48
4-2. LED Locations 49
4-3. Captive Fastening Screws 52
4-4. Main Battery Pack 53
4-5. Removing the Battery Pack 54
4-6. Removing/Replacing the Coin Cell Battery 56
4-7. Firmware Update Dialog 57
A-1. Data Plate (No Battery) – Class I Div 2 Non-incendive (UL) 60
A-2. Data Plate (Lead Acid Battery) – Class I Div 2 Non-incendive (UL) 61
A-3. Data Plate (Lithium Battery) – Class I Div 2 Non-incendive (UL) 62
B-1. Data Plate (No Battery) – Class I Div 1 Explosion Proof (UL) 65
B-2. Data Plate (Lead Acid Battery) – Class I Div 1 Explosion Proof (UL) 66
B-3. Data Plate (Lithium Battery) – Class I Div 1 Explosion Proof (UL) 67
C-1. Data Plate - ATEX nA Non-Sparking 70
D-1. Data Plate – ATEX Ex db Flame-proof 71
Firmware
upgrading 56
Flame-proof
ATEX Zone 1 certification notes 71
FLASH memory
amount of 4

G

Grounding 22

H

Hazardous locations 11
Class I Division 1 63
Class I Division 2 59
notes on ATEX Zone 1 71
notes on ATEX Zone 2 69
HMI module 7
communicating using 43
replacing 51
Housing
rotating 21

I

I/O
digital output 39
options 6
Indirect mounting 19
Installation 11

L

LCD
replacing 51
LEDs
meaning 49

M

Memory
clearing SRAM 51
FLASH
amount of 4
Mounting

bolting considerations....17
direct....19
indirect....19
Mounting kit
coplanar....20
traditional flange....20

N

Non-sparking
ATEX Zone 2 certification notes....69

O

Operation....41
O-rings....18

P

Physical Security....5
Ports
connecting....33
Power
battery connections....27
connecting....25
connecting solar power....31
DC connections....26
Options....6
Powering Up/Powering Down the Device....41

R

Replacing the SRAM battery....55
Required equipment....12
Resetting the flow computer....51
Retaining clamp....14
Returning the unit for repairs....48
RoHS2 Compliance....10
Rotating the housing....21
RTD
connecting....38

S

Safety Labels....3
Secure gateway....10
Security seals....5
Serial communications....42
Service....47
Site considerations....13
Software Tools....9
Solar panel
adjusting the tilt angle....32
installing the optional....27
integral mounting....29
power connection....31
remote mount (pole mount)....30
remote mounted (pole mounted)....31
SRAM
amount of....4
clearing....51
SRAM battery
replacing....55
Standard Power Mode....24
Status LEDs....49
Switch....51
System firmware
upgrading....56
SYSTEM RESET button....51

T

Tables
1-1. Memory....4
1-2. Power Options....6
1-3. Serial Ports....7
2-1. Environmental Specifications....12
2-2. Required Tools....12
2-3. Bolt Torque Values....18
2-4. Typical Power Usage (Low Power Mode)....24
2-5. Typical Power Usage (Standard Power Mode)25
2-6. Solar Panel Tilt Angle....33
3-1. Infrared (IR) Buttons on HMI Module....46
3-2. Symbols on Display....46
4-1. LED Descriptions....50
4-2. Special LED Sequences....50
4-3. Switch and Buttons....51
E-1. Autonomous Mode Requirements....73
E-2. Estimated Effect of Ambient Temperature on Battery Life....74
Terminal Plate....23
Tools
required....12
Traditional flange mounting kit....20
Troubleshooting....47

U

Upgrading system firmware....56

W

Wi-Fi....8, 43
Wiring
guidelines....14

Z

Zone 1
ATEX certification notes 71
Zone 2
ATEX certification notes 69

For customer service and technical support,
visit *www.Emerson.com/SupportNet*

Global Headquarters,
North America, and Latin America:
Emerson Automation Solutions
Remote Automation Solutions
6005 Rogerdale Road
Houston, TX 77072 U.S.A.
T +1 281 879 2699 | F +1 281 988 4445
www.Emerson.com/RemoteAutomation

Europe:
Emerson Automation Solutions
Remote Automation Solutions
Unit 1, Waterfront Business Park
Dudley Road, Brierley Hill
Dudley DY5 1LX UK
T +44 1384 487200

Middle East/Africa:
Emerson Automation Solutions
Remote Automation Solutions
Emerson FZE
P.O. Box 17033
Jebel Ali Free Zone – South 2
Dubai U.A.E.
T +971 4 8118100 | F +971 4 8865465

Asia-Pacific:
Emerson Automation Solutions
Remote Automation Solutions
1 Pandan Crescent
Singapore 128461
T +65 6777 8211 | F +65 6777 0947

© 2018-2022 Remote Automation Solutions, a business unit of Emerson Automation Solutions. All rights reserved.

This publication is for informational purposes only. While every effort has been made to ensure accuracy, this publication shall not be read to include any warranty or guarantee, express or implied, including as regards the products or services described or their use or applicability. Remote Automation Solutions (RAS) reserves the right to modify or improve the designs or specifications of its products at any time without notice. All sales are governed by RAS terms and conditions which are available upon request. RAS accepts no responsibility for proper selection, use or maintenance of any product, which remains solely with the purchaser and/or end-user. Emerson Automation Solutions, Emerson, and the Emerson logo are trademarks and service marks of Emerson Electric Co. All other marks are the property of their respective owners.