Service Instructions
124840E Rev. H
June 2021

Bettis G/GH/GHC Series Pneumatic Actuators

Disassembly and Reassembly

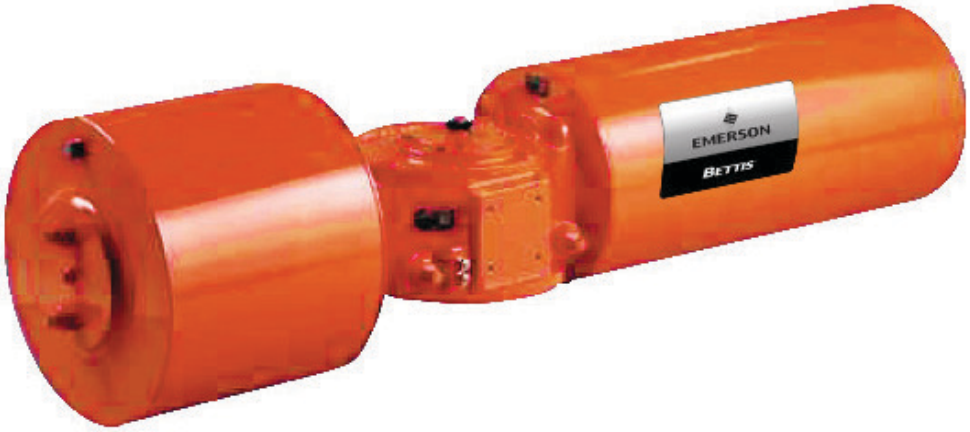

BETTIS™

EMERSON™

This page is intentionally left blank

Table of Contents

Section 1: Introduction

1.1 General Service Information 1
1.2 Definitions 2
1.3 General Safety Information 2
1.4 Bettis Reference Materials 3
1.5 Service Support Items 3
1.6 Lubrication Requirements 4
1.7 General Tool Information 4
1.8 Actuator Storage 4
1.9 Actuator Installation 5
1.10 Actuator Start-up 5
1.11 Actuator Operation 6

Section 2: Actuator Disassembly

2.1 General Disassembly 7
2.2 Pneumatic Power Module Disassembly 8
2.3 Drive Module Disassembly 11
2.4 Blind End Cap Module Removal 14
2.5 M3 Handwheel or M3 Hex Drive Hub Removal 14
2.6 M3 Jackscrew Disassembly 15
2.7 Extended Stop Blind End Cap Disassembly 16

Section 3: Actuator Reassembly

3.1 General Reassembly 17
3.2 Drive Module Reassembly 17
3.3 Pneumatic Power Module Reassembly 23
3.4 G2 and G3 Early Model Pneumatic Power Module Reassembly 28
3.5 Blind End Cap Module Reassembly 31
3.6 M3 Jackscrew Reassembly 32
3.7 M3 Handwheel or M3 Hex Drive Hub Installation 34
3.8 Extended Stop Blind End Cap Reassembly 35
3.9 Actuator Testing 35

Section 4: Field Conversions

4.1 Fail Mode Reversal (CW to CCW, Or CCW to CW) for G and GH Only 37
4.2 Converting Double-Acting Actuator to Spring-Return 37
4.3 Converting Spring-Return Actuator to Double-Acting 37
4.4 Add an M3 Jackscrew to Blind End Cap Module 38
4.5 Add an M3 Jackscrew to Power Module Outer End Cap 38
4.6 Add an M3 Jackscrew to Spring Module 38
4.7 Add an Extended Stop (ES) to Blind End Cap Module 38
4.8 Add an Extended Stop (ES) to Power Module Outer End Cap 39
4.9 Add an Extended Stop (ES) to Spring Module 39

Section 5: Module Removal and Installation

5.1 Spring Module Removal 40
5.2 Spring Module Installation 42
5.3 Pneumatic Power Module Removal 47
5.4 Pneumatic Power Module Installation 48
5.5 G2 Thru G13 Powr Swivl Removal (Excludes GH/GHC Model Actuators) 50
5.6 G2 Thru G13 Powr Swivl Module Installation (Excludes GH/GHC Model Actuators)..... 51

Section 6: Actuator Support Information

6.1 G/GC/GH/GHC Module Weights By Item Number And Actuator Housing Size 52
6.2 G01 Tool Style and Wrench Size 53
6.3 G/GC2 Tool Style and Wrench Size..... 54
6.4 G/GC3 Tool Style and Wrench Size GH2/GHC2 for Item No 3-20 to 3-130.... 54
6.5 G/GC4 Tool Style and Wrench Size GH3/GHC3 For Item No 3-20 to 3-130 ... 55
6.6 G/GC5 Tool Style and Wrench Size GH4/GHC4 For Item No 3-20 to 3-130 ... 55
6.7 G/GC7 Tool Style and Wrench Size GH5/GHC5 For Item No 3-20 to 3-130 ... 56
6.8 G/GC8 Tool Style and Wrench Size GH7/GHC7 For Item No 3-20 to 3-130 ... 56
6.9 G/GC10 Tool Style and Wrench Size GH8/GHC8 For Item No 3-20 to 3-130 ... 57
6.10 G13 Tool Style and Wrench Size GH10/GHC10 For Item No 3-20 to 3-130 ... 57

Section 7: Troubleshooting

7.1 Fault Insertion 58
7.2 Operational Test..... 58

Section 8: Removal and Decommissioning

8.1 Removal and Decommissioning 60

Section 9: Document Revision

Document Revision.....61

Appendix A: List of Tables

List of Tables.....62

Appendix B: List of Drawings

List of Drawings.....63

Section 1: Introduction

1.1 General Service Information

1.1.1 This service procedure is offered as a guide to enable general maintenance to be performed on Bettis™ G/GC01XXX, G/GC2XXX, G/GC3XXX, G/GC4XXX, G/GC5XXX, G/GC7XXX, G/GC8XXX, G/GC10XXX, G13XXX, and GH/GHC2XXX, GH/GHC3XXX, GH/GHC4XXX, GH/GHC5XXX, GH/GHC7XXX, GH/GHC8XXX Spring-Return (SR) Series Single Power Module Pneumatic Actuators. These procedures can also be used on Bettis GXX2XX Double-Acting Series Twin Power Modules Pneumatic Actuators.

1.1.2 Normal recommended service interval for this actuator series is five years.

NOTE:
Storage time is counted as part of the service interval.

1.1.3 This procedure is applicable with the understanding that all electrical power and pneumatic pressure has been removed from the actuator.

1.1.4 Remove all piping and mounted accessories that will interfere with the module(s) that are to be worked on.

1.1.5 This procedure should only be implemented by a technically competent technician who should take care to observe good workmanship practices.

1.1.6 Numbers in parentheses, ( ) indicate the bubble number (reference number) used on the Bettis Assembly Drawing and Actuator Parts List.

1.1.7 This procedure is written using the stop screw side of the housing (1-10) as a reference and this side will be considered the front side of the actuator. The housing cover (1-20) will be the top of the actuator.

1.1.8 Actuator module weights are listed in Section 6, Table 6.1.

1.1.9 When removing seals from seal grooves, use a commercial seal removing tool or a small screwdriver with sharp corners rounded off.

1.1.10 Use a non-hardening thread sealant on all pipe threads.

⚠ CAUTION

Apply the thread sealant per the manufacturer's instructions.

1.1.11 Bettis recommends that disassembly of the actuator should be done in a clean area on a workbench.

1.2 Definitions

⚠ WARNING

If not observed, user incurs a high risk of severe damage to actuator and/or fatal injury to personnel.

⚠ CAUTION

If not observed, user may incur damage to actuator and/or injury to personnel.

NOTE:

Advisory and information comments provided to assist maintenance personnel to carry out maintenance procedures.

NOTE:

This product is only intended for use in large-scale fixed installations excluded from the scope of Directive 2011/65/EU on the restriction of the use of certain hazardous substances in electrical and electronic equipment (RoHS 2).

ES:

Extended stop screw (for travel stop adjustment over a full 100° degree travel range). ES is not intended for use as a manual override.

M3:

Manual jackscrew override

GC/GH/GHC:

1.3 General Safety Information

1.3.1 Products supplied by Bettis, in its “as shipped” condition, are intrinsically safe if the instructions contained within this Service Instruction are strictly adhered to and executed by well trained, equipped, prepared and competent personnel.

⚠ WARNING

For the protection of personnel working on Bettis actuators, this procedure should be reviewed and implemented for safe disassembly and reassembly. Close attention should be noted to the WARNINGS, CAUTIONS and NOTES contained in this procedure.

⚠ WARNING

This procedure should not supersede or replace any customer's plant safety or work procedures. If a conflict arises between this procedure and the customer's procedures the differences should be resolved in writing between an authorized customer's representative and an authorized Bettis representative.

1.4 Bettis Reference Materials

1.4.1 Assembly Drawing for G/GC01 through G/GC10 and G13 Double-Acting One Power Module Pneumatic Series Actuators use part number 116422.

1.4.2 Assembly Drawing for G01 through G13 Double-Acting Twin Power Module Pneumatic Series Actuators use part number 115678.

1.4.3 Assembly Drawing for G/GC01 through G/GC10 and G13 Spring-Return One Power Module Pneumatic Series Actuators use part number 115674.

1.4.4 Assembly Drawing for GH/GHC 2 through 10, Spring-Return One Power Module Pneumatic Series Actuators use part number 140952.

NOTE:

If you require a specific Assembly Drawing (IE: GXX-M3 OR HYD) please contact Emerson Actuation Technologies Bettis by phone or email at Info.actuationtechnologies@emerson.com

1.5 Service Support Items

1.5.1 Bettis Module Service Kit.

NOTE:

Although the below part numbers say GXX, they can also be used on G/GC/GH/GHCXX actuators.

1.5.2 For rod extension retainer nut tool part number, refer to the table below.

NOTE:

These tools are required only when extension rod assembly (1-50) or (9-50) is removed or when a new extension rod assembly is installed.

Table 1. Rod Extension Retainer Nut Tool Part Number

ACTUATOR MODEL	BETTIS PART NUMBER
G01	None Required
G2	123616
G3/G4	117370

ACTUATOR MODEL	BETTIS PART NUMBER
G5/G7	117369
G8/G10	117368
G13	122849

1.5.3 Commercial leak testing solution.

1.5.4 Non-hardening thread sealant.

1.6 Lubrication Requirements

NOTE:

Lubricants other than those listed in step 1.6.1 should not be used without prior written approval of Bettis Product Engineering.

1.6.1 All temperature services (-50 °F to +350 °F)/(-45.5 °C to 176.6 °C) use Bettis ESL-5 lubricant. ESL-5 lubricant is contained in the Bettis module service kit in tubes and the tubes are marked ESL-4, 5 and 10 lubricant.

1.7 General Tool Information

1.7.1 Tools: All tools/Hexagons are American Standard inch (Imperial). Large adjustable wrench, two (2) large screwdrivers, Allen wrench set, set of open/box-end wrenches, rubber or leather mallet, torque wrench (up to 1600 foot pounds / 2169 N-m), breaker bar, and a drive socket set. For recommended tool and wrench sizes refer to Section 6, Tables 6.2 to 6.10.

1.8 Actuator Storage

For applications where the actuator is not placed into immediate service, it is recommended that the actuator be cycled with regulated clean/dry pneumatic pressure at least once per month. Indoor storage, if available, is recommended for all actuators. Care should be taken to plug all open ports on actuator and controls to keep out foreign particles and moisture. Actuators should not be stored in an atmosphere that is harmful to resilient seals. Contact factory for extended storage period.

1.9 Actuator Installation

1.9.1 Since there are many valve and actuator combinations, it is not practical to include detailed instructions for each type. Mountings are designed to be as simple as possible to keep the guess work out of the installation.

1.9.2 Actuators that are shipped from the factory with the travel stops adjusted for approximately ninety degree rotation. Generally, it is necessary to make slight travel stop adjustments once the actuator is installed onto the valve. Refer to the valve manufacturer's recommendations for specific requirements. When the valve has internal stops, the actuator should be adjusted at the same points.

NOTE:

The actual "stopping" should be done by the actuator. If the valve does not have internal stops, adjust the actuator to the full open position. Using this as a reference point, rotate the valve closed and adjust to the valve manufacturer's specifications for total rotation.

1.9.3 Good instrument practices are also recommended. Clean/dry regulated pneumatic pressure is essential for long service life and satisfactory operation. It should be noted that new pneumatic lines often have scale and other debris in them and these lines should be purged of all foreign material.

NOTE:

Scale and debris can damage control valves, solenoids, and seals.

1.10 Actuator Start-up

1.10.1 Prestart-up checks

1. Inspect to ensure the unit has been mounted onto valve properly. Gear flange mounting bolts, stem key, setscrew(s) are installed and secured.
2. No tubing damaged or accessories dislodged during the shipping or the installation.
3. Indicated position confirms valve position.
4. All switching valves in normal operating position as per SCHEMATIC / INSTRUCTIONS.

1.10.2 Check Connections

1. Pneumatic / hydraulic components connected as per schematic enclosed or in service manual supplied.
2. Pneumatic supply connected to the identified ports.
3. Electrical connection terminals are secured.
4. Wiring as per enclosed diagram or service manual supplied.

1.10.3 When actuator is first placed into service, it should be cycled with regulated pneumatic pressure. This is necessary because the seals have been stationary, causing them to take a "set". Therefore, the actuator should be operated through several cycles to exercise the seals so as to achieve a service ready condition.

1.10.4 The actuator speed of operation is determined by a number of factors includes:

1. Power supply line length
2. Power supply line size
3. Power supply line pressure
4. Control valve and fitting orifice size
5. Torque requirements of the valve
6. Size of the actuator
7. Setting of speed controls
8. Hydraulic Manual Override (where available)

1.10.5 Due to the interaction of these variables, it is difficult to specify a "normal" operating time. Faster operating time may be obtained by using one or more of the following:

1. Larger supply lines
2. Larger control valve
3. Higher supply pressure *
4. Quick exhaust valves

— * Not to exceed maximum operating pressure of actuator or control components.

1.10.6 Slower operating time may be obtained by using flow control valves to meter the exhaust. Excessive exhaust flow metering may cause erratic operation.

1.11 Actuator Operation

1.11.1 Controlled Operation: Controlled operation is accomplished by pressurizing and/or depressurizing the appropriate cylinder inlet(s) of a double-acting. Do not exceed pressures indicated on actuator nameplate.

1.11.2 Manual Operation: All pressure must be vented or equalized on both sides of the pneumatic piston prior to manual operation.

Section 2: Actuator Disassembly

2.1 General Disassembly

⚠ WARNING

It is possible, that the actuator may contain a dangerous gas and/or liquids. Ensure that all proper measures have been taken to prevent exposure or release of these types of contaminants before commencing any work.

2.1.1 Section 2 - Actuator Disassembly is written to either completely disassemble the entire actuator or can be used to disassemble individual modules as needed (pneumatic power module or drive module, etc.).

⚠ WARNING

Do not remove spring module while spring is compressed.

⚠ WARNING

Actuators equipped with a spring cartridge mounted M3 jackscrew or an extended stop (ES) read warning tag wired to the spring cartridge cover plate.

2.1.2 When the spring module is to be removed it should be removed from the drive module prior to the pneumatic power module removal or disassembly.

2.1.3 The pneumatic power module can be disassembled while still attached to the drive module or the pneumatic power module can be removed from the drive module and disassembled separate to the actuator (refer to Section 5 - Module Removal And Installation).

2.1.4 To ensure correct re-assembly; that is, with pneumatic power module or spring module on same end of drive module as was, mark or tag right (or left) and mark mating surfaces.

2.1.5 For spring module removal refer to Section 5, step 5.1.

2.2 Pneumatic Power Module Disassembly

NOTE:
Review Section 2 steps 2.1.1 through 2.1.5 General Disassembly before proceeding with Pneumatic Power Module Disassembly.

NOTE:
If the actuator model is a GXX2XX Series (two same size power modules with one module mounted on each side of the drive module) then do the following steps on both power modules simultaneously or complete one power module and then repeat Section 2.2 on the second power module.

⚠ WARNING

If not already removed disconnect all operating pressure from actuator power cylinders.

⚠ WARNING

If the actuator is spring-return then the spring cartridge must be checked to verify that the spring(s) are in their extended position before the pneumatic power module is disassembled from the drive module (refer to Section 5.1 through step 5.1.6).

2.2.1 Mark and record location of the ports on outer end cap (3-80) and inner end cap (3-10).

NOTE:
If actuator is equipped with a spring module complete step 2.2.2. If actuator is a double-acting model skip step 2.2.2 and go to step 2.2.3.

2.2.2 Remove breather assembly (12) from outer end cap (3-80).

2.2.3 Refer to Assembly Drawing page 2 of 2 Detail "E". Remove two socket cap screws (3-130), with lockwasher (3-140), from outer end cap (3-80).

NOTE:
If the power module is equipped with an M3 jackscrew remove the M3 jackscrew using Section 2.6.5 for G/GH01 models and Section 2.6.6 for G/GH2 and G/GH3 models.

2.2.4 Outer end cap (3-80) removal as follows:

2.2.4.1 G/GC01 through G/GC10, G13, and GH/GHC2 through GH/GHC10 standard end cap (3-80) removal. Continue at step 2.2.5.

2.2.4.2 G/GC01-M3 jackscrew disassembly from outer end cap (3-80)

2.2.4.2.1 Remove M3 handwheel or M3 hex drive hub from M3 (3-290) per Section 2.5.

2.2.4.2.2 Refer to Assembly Drawing page 2 of 2 Detail "E". If not already removed unscrew and remove two socket cap screws (3-130), with lockwasher (3-140), from outer end cap (3-80).

2.2.4.2.3 Remove socket cap screw (3-130) with lockwasher (3-140) from keeper (3-360).

2.2.4.2.4 Remove keeper (3-360) from outer end cap (3-80).

2.2.4.2.5 Push jackscrew (3-290) back into the outer end cap far enough so that the jackscrew adapter (3-280) will not interfere with the removal of hex nuts (3-90). Continue at step 2.2.5.

2.2.4.3 G/GC/GH/GHC02 and G/GC/GH/GHC3-M3 jackscrew disassembly from outer end cap (3-80).

2.2.4.3.1 Remove M3 handwheel or M3 hex drive hub from M3 (3-290) per Section 2.5.

2.2.4.3.2 Unscrew and remove hex flat nut (3-300) from G2/G3 M3 jackscrew (3-290).

2.2.4.3.3 Unscrew and remove two socket cap screws (3-320) from G2/G3 M3 adapter (3-280).

2.2.4.3.4 Remove M3 jackscrew (3-290) from outer end cap (3-80). Continue at step 2.2.5.

2.2.5 Remove two tie bar hex nuts (3-90) from outboard side of outer end cap (3-80).

2.2.6 The fit between cylinder (3-70) and outer end cap (3-80) is very tight. Break end cap free by tapping with a breaker bar on lip provided on the end cap. Remove outer end cap (3-80) from cylinder (3-70).

⚠ CAUTION

Do not damage O-ring groove when removing end cap from cylinder.

NOTE:

When removing cylinder (3-70) off of piston (3-30), tilt the cylinder 15° to 30° with respect to actuator centerline.

2.2.7 Remove cylinder (3-70) from inner end cap (3-10).

⚠ CAUTION: USE CORRECT TOOLS

Do not use pipe wrench to remove tie bars.

2.2.8 Tie bar removal:

NOTE:
G/GC01, G/GC/GH/GHC2 and G/GC/GH/GHC3 models have flats on outboard end of tie bars (3-20) for wrench placement.

2.2.8.1 Remove G/GC01, G/GC/GH/GHC2 and G/GC/GH/GHC3 tie bars (3-20) as follows:

2.2.8.1.1 Unscrew tie bars (3-20) from inner end cap (3-10). Pull the tie bars out of the inner end cap far enough to expose the O-ring seals (4-80).

2.2.8.1.2 Remove O-ring seals (4-80) from the inboard end of tie bars (3-20).

2.2.8.1.3 Remove tie bars (3-20) by pulling the tie bars out and through piston (3-30).

NOTE:
G/GC4 models have flats on outboard end of tie bars (3-20) for wrench placement.

NOTE:
G5 through G13, and GH/GHC5 through GH/GHC10 models have a female square on the out board end of tie bars (3-20) for wrench placement.

2.2.8.2 Remove G4 through G13 tie bars (3-20) as follows: Unscrew and remove tie bars (3-20) from inner end cap (3-10) and piston (3-30).

2.2.9 Remove piston as follows: (On early G2 and G3 models equipped with outboard and inboard tie bar nuts skip this step and go to step 2.2.11).

2.2.9.1 Refer to Assembly Drawing page 2 of 2 Detail "D". Remove two split ring halves (3-50) and one retainer ring (3-60) from outboard side of piston (3-30).

NOTE:
Piston (3-30) acts as the retainer for inboard split ring halves (3-50). When removing the piston be careful to not lose inboard split ring halves (3-50).

2.2.9.2 Remove piston (3-30) and two split ring halves (3-50) from piston rod (3-40).

NOTE:
Steps 2.2.10 is used only on early G2 and G3 models equipped with outboard and inboard tie bar nuts.

2.2.10 Remove early model G2 and G3 pistons as follows:

2.2.10.1 Refer to Assembly Drawing page 2 of 2 Detail "D". Remove two split ring halves (3-50) and one retainer ring (3-60) from inboard side of piston (3-30).

NOTE:
Piston (3-30) acts as the retainer for outboard split ring halves (3-50).

2.2.10.2 Slide piston (3-30) toward the inner end cap (3-10) until the out board split ring halves is exposed enough for removal. Remove outboard split ring halves from piston rod (3-40).

2.2.10.3 Remove piston (3-30) and two split ring halves (3-50) from piston rod (3-40).

2.2.11 Remove O-ring seal (4-70) from piston rod (3-40).

2.2.12 Remove hex cap screws (3-100) with lockwashers (3-110) from housing (1-10).

2.2.13 Remove inner end cap (3-10) off of piston rod (3-40).

NOTE:
On early model G2 and G3 actuators remove two hex nuts (3-90) from housing (1-10). These two nuts will be loose after tie bars (3-20) are removed in step 2.2.8.1 and will be located in the area where the piston rod passes through the housing (1-10).

NOTE:
The piston rod (3-40) removal as outlined in step 2.2.14 is only required when the piston rod is being replaced or when the drive module is to be disassembled.

2.2.14 Unscrew and remove piston rod (3-40) from drive module.

2.3 Drive Module Disassembly

NOTE:
Review Section 2 steps 2.1.1 through 2.1.5 general disassembly before proceeding with drive module disassembly.

2.3.1 If not already removed remove piston rod (3-40) from drive module.

NOTE:

If the actuator is equipped with submerged stop screws with stop screw covers (1-195) then proceed to and complete steps 2.3.2.1 and 2.3.2.2 prior to doing step 2.3.2.

2.3.2 Mark stop screws (1-180) left and right. The setting of stop screws (1-180) should be checked and setting recorded before stop screws are loosened or removed.

NOTE:

Stop screws will be removed later in this procedure.

2.3.2.1 Hold stop screw cover (1-195) in place and remove pipe plug (1-260).

2.3.2.2 Hold submerged stop screw (1-180) in place and remove stop screw cover (1-195).

NOTE:

For steps 2.3.3 through 2.3.10 refer to Assembly Drawing page 2 of 2 Section A-A, Detail "F" on drawing part number 115674 and Detail "G" on drawing part number 116422.

2.3.3 Before removing position indicator (1-220), record or mark its position. Remove position indicator (1-220).

NOTE:

Step 2.3.4 is used only on G01, GH/GHC 2 and GH/GHC 3 drive modules. Drive modules GH/GHC4 through G/GC/GH/GHC10 and G13 will skip steps 2.3.4 and continue with step 2.3.5.

2.3.4 Remove one vent check assembly (13) from top of housing cover (1-20).

2.3.5 Unscrew and remove hex cap screws (1-160) with lockwashers (1-170) from yoke cover (1-150).

2.3.6 Remove yoke cover (1-150) from housing cover (1-20).

2.3.7 Mark and record the orientation of the position indicator assembly (1-140) in relation to the top of yoke (1-70).

2.3.8 Remove position indicator assembly (1-140) from top of yoke (1-70).

2.3.9 Remove spring pin (1-100) from top of yoke (1-70).

2.3.10 Remove hex cap screws (1-110), with lockwashers (1-115) from housing cover (1-20).

NOTE:

Steps 2.3.11 and 2.3.12 are used only on G/GC/GH/GHC5, G/GC/GH/GHC7, G/GC/GH/GHC8 and 10 drive modules. Drive modules G/GC01, G/GC/GH/GHC2 through 4 will skip steps 2.3.11 and 2.3.12 and continue with step 2.3.13.

2.3.11 Remove hex cap screws (1-120), with lockwashers (1-115), from housing cover (1-20).

2.3.12 Using hex cap screws (1-110), install into holes vacated by hex cap screws (1-120). Use these hex cap screws to jack the housing cover up for removal. Alternately rotate the hex cap screws clockwise until housing cover (1-20) is clear of housing (1-10).

NOTE:

G/GC01, G/GC/GH/GHC2 through 4 model housing cover will have cast tabs for placing prying tools to aid in cover removal.

2.3.13 Remove housing cover (1-20) from housing (1-10).

NOTE:

Groove pins (1-130) will remain in housing cover (1-20) when housing cover is removed from housing (1-10). Groove pins (1-130) should not be removed from housing cover (1-20) unless they are damaged and require new replacements.

2.3.14 Refer to Assembly Drawing page 2 of 2 Detail "B". Remove guide bar (1-90) from housing (1-10).

2.3.15 Remove top yoke pin thrust bearing (2-10) from top of yoke pin (1-80).

2.3.16 Rotate the arms of yoke (1-70) to the center position of housing (1-10).

2.3.17 Remove yoke (1-70) with yoke pin (1-80), guide block (1-30) and two yoke/guide block bushings (2-30), by lifting yoke up and out of the housing (1-10).

2.3.18 Remove bottom yoke pin thrust bearing (2-10) from inside bottom of housing (1-10).

2.3.19 Remove yoke pin (1-80) by inserting 3/8"-16 UNC screw into top of the yoke pin and pull straight up and out.

2.3.20 Remove guide block (1-30) from between the arms of yoke (1-70).

2.3.21 Remove yoke/guide block bushing (2-30) from top of guide block (1-30).

2.3.22 Remove yoke/guide block bushing (2-30) from the top of the lower yoke arm of yoke (1-70).

NOTE:

G01 model actuators skip steps 2.3.23 through 2.3.25 and continue disassembly at step 2.3.26.

2.3.23 Refer to Assembly Drawing page 2 of 2 Detail "B". Use Bettis tool part numbers 117368 (G8/G10), 117369 (G5/G7), 117370 (G3/G4), 122849 (G13) or 123616 (G2) and remove retention retainer nut assemblies (1-60) from guide block (1-30). On spring-return actuators also remove retention retainer nut assemblies (9-60). These tools can be used for GC/GH/GHC models of equivalent size.

2.3.24 Remove extension rod assembly (1-50) from guide block (1-30). On spring-return actuators also remove rod extension assembly (9-50).

NOTE:

On G/GC models only (Non GH/GHC): One spherical washer (1-40) will be removed from guide block (1-30) when extension rod assembly is removed. On spring-return actuators also one spherical washer (9-40) will be removed from guide block (1-30). On GH/GHC actuators, there is no extension rod assembly; the piston rod is fastened directly into the guide block assembly instead.

2.3.25 Remove the remaining spherical washer (1-40) from guide block (1-30). On spring-return actuators also remove the remaining spherical washer (9-40) from guide block (1-30).

2.3.26 Unscrew and remove two stop screw nuts (1-190) from stop screws (1-180).

2.3.27 Unscrew and remove two stop screws (1-180) from front of housing (1-10).

2.3.28 Housing (1-10) vent check assembly removal as follows:

2.3.28.1 G01, G/GC/GH/GHC2 and G/GC/GH/GHC3 housing (1-10) unscrew and remove one vent check assembly (13) from the front of housing (1-10).

2.3.28.2 G/GC/GH/GHC4 through G/GC/GH/GHC10 and G13 housing (1-10) unscrew and remove two vent check assembly's (13) from the front of housing (1-10).

2.3.29 The following items do not need to be removed from their assembled locations unless being replaced by new items: Two guide bar bearings, two yoke bearings (2-40), yoke pin bearing and yoke pin thrust bearing (2-10).

2.4 Blind End Cap Module Removal

2.4.1 Remove hex cap screws (5-20), with spring lockwashers (5-30), from blind end cap (5-10).

2.4.2 Remove blind end cap (5-10) from end of housing (1-10).

2.5 M3 Handwheel or M3 Hex Drive Hub Removal

2.5.1 M3 HANDWHEEL OR HEX DRIVE HUB REMOVAL FROM M3 STUD

2.5.1.1 Using pin punch drive out two grooved pins (10-20) and (10-30) from handwheel hub or hex drive hub (10-10).

2.5.1.2 Remove handwheel or hex drive hub (10-10) from M3 stud (5-50).

2.5.2 EARLY MODEL G2 and G3 M3 HANDWHEEL AND HEX NUT REMOVAL FROM JACKSCREW

2.5.2.1 Remove hex nut, lockwasher from M3 jackscrew.

2.5.2.2 Remove handwheel from M3 jackscrew.

2.5.2.3 Using pin punch drive out spiral pin from outboard end of M3 jackscrew

2.5.2.4 Remove hex nut from M3 jackscrew, and handwheel.

2.6 M3 Jackscrew Disassembly

NOTE:
The jackscrew bearing retainer (7-110) / (5-110), needle bearing thrust washer assembly (7-100) / (5-100) or retainer ring (7-90) / (5-90) does not require disassembly from the jackscrew assembly (7-40) / (5-50) except for the need to replace worn parts.
For disassembly of these items refer to step 2.6.7. Remove M3 handwheel or M3 hex drive hub per Section 2.5.

2.6.1 G01-M3 JACKSCREW DISASSEMBLY FROM BLIND END CAP

2.6.1.1 Remove M3 handwheel or M3 hex drive hub per Section 2.5.

NOTE:
See note 2.6 before proceeding with step 2.6.1.2 through 2.6.1.4.

2.6.1.2 Unscrew and remove socket cap screw (5-120) with lockwasher (5-130) from keeper (5-140).

2.6.1.3 Remove keeper (5-140) from blind end cap (5-10).

2.6.1.4 Remove M3 jackscrew (5-50) from blind end cap (5-10).

2.6.2 G2-M3 AND G3-M3 JACKSCREW DISASSEMBLY FROM BLIND END CAP

2.6.2.1 Remove M3 handwheel or M3 hex drive hub per Section 2.5.

NOTE:
See 2.6 note before proceeding with step 2.6.2.2 through 2.6.2.4.

2.6.2.2 Unscrew and remove hex flat nut (5-60) from G2/G3 M3 jackscrew.

2.6.2.3 Unscrew and remove two socket cap screws (5-120) from G2/G3 M3 adapter.

2.6.2.4 Remove M3 jackscrew (5-50) from blind end cap (5-10).

2.6.3 G01-SR-M3 JACKSCREW DISASSEMBLY FROM SR-M3 ADAPTER PLATE.

2.6.3.1 Remove M3 handwheel or M3 hex drive hub per Section 2.5.

NOTE:
See 2.6 note before proceeding with step 2.6.3.2 through 2.6.3.4.

2.6.3.2 Unscrew and remove hex flat nut (7-50) from M3 jackscrew assembly (7-40).

2.6.3.3 Remove retainer ring (7-55) from M3 adapter (7-45).

2.6.3.4 Remove M3 jackscrew assembly (7-40) from M3-SR adapter plate (7-10).

2.6.4 G2 AND G3-SR-M3 JACKSCREW DISASSEMBLY FROM SR-M3 ADAPTER PLATE

2.6.4.1 Remove M3 handwheel or M3 hex drive hub per Section 2.5.

NOTE:

See 2.6 note before proceeding with step 2.6.4.2 through 2.6.4.4.

2.6.4.2 Unscrew and remove hex flat nut (7-50) from M3 jackscrew assembly (7-40).

2.6.4.3 Unscrew and remove two socket cap screws (7-120) from M3 adapter (7-40).

2.6.4.4 Remove M3 jackscrew (7-40) from M3-SR adapter plate (7-10).

2.6.5 M3 THRUST BEARING DISASSEMBLY FROM M3 JACKSCREW ASSEMBLY

2.6.5.1 Remove M3 bearing retainer (5-110) / (7-110) from inboard end of M3 jackscrew assembly (5-50) / (7-40).

2.6.5.2 Remove needle roller thrust bearing (5-100) / (7-100) from M3 bearing retainer (5-110) / (7-110).

2.6.5.3 Remove retainer ring (5-90) / (7-90) from M3 jackscrew assembly (5-50) / (7-40).

2.7 Extended Stop Blind End Cap Disassembly

2.7.1 Unscrew and remove hex nut (5-60) from ES stop screw (5-50).

2.7.2 Remove ES stop screw (5-50) from ES blind end cap (5-10).

Section 3: Actuator Reassembly

3.1 General Reassembly

⚠ CAUTION: CHECK SHELF LIFE OF SEALS

Only new seals, which are still within the seal's expectant shelf life, should be installed into the actuator being refurbished.

3.1.1 Remove and discard all old seals and gaskets.

3.1.2 All parts should be cleaned to remove all dirt and other foreign material prior to inspection.

3.1.3 All parts should be thoroughly inspected for excessive wear, stress cracking, galling and pitting. Attention should be directed to threads, sealing surfaces and areas that will be subjected to sliding or rotating motion. Sealing surfaces of the cylinder, tie bars and piston rod must be free of deep scratches, pitting, corrosion and blistering or flaking coating.

⚠ CAUTION: REPLACE WITH NEW PARTS

Actuator parts that reflect any of the above listed characteristics should be replaced with new parts.

3.1.4 Before installation coat all moving parts with a complete film of lubricant. Coat all seals with a complete film of lubricant, before installing into seal grooves.

NOTE:

The parts and seals used in the actuator will be assembled using lubricant as identified in Section 1, step 1.6.1.

3.1.5 For spring module installation refer to Section 5, step 5.2.

3.2 Drive Module Reassembly

NOTE:

Review Section 3.1 General Reassembly before proceeding with Drive Module Reassembly Refer to Assembly Drawing page 2 of 2 Detail "B" for section drawing of guide block.

3.2.1 If guide bar bearing (2-20) is being replaced install new bearing into guide block (1-30).

NOTE:

The guide bar bearing (2-20) must be pressed into guide block guide bar bore with the seam located ±5 degrees of the top or bottom centerline as shown in Section A-A.

NOTE:

G01 model actuators skip steps 3.2.2 through 3.2.13 and continue reassembly at step 3.2.14.

3.2.2 Lubricate guide block (1-30), two spherical washers (G/GC only) (1-40), and one extension rod assembly (G/GC only) (1-50).

NOTE:

STEPS 3.2.3 – 3.2.13 FOR G/GC MODELS ONLY (Not GH/GHC).

3.2.3 Install one spherical washer (1-40) into the side of guide block (1-30).

NOTE:

The spherical side of washer (1-40) will be facing to the outside of guide block (1-30).

3.2.4 Install second spherical washer (1-40) over threaded end of extension rod assembly (1-50).

NOTE:

The spherical side of the washer will go on the extension rod assembly facing the head of the extension rod assembly.

3.2.5 Install extension rod assembly (1-50) into guide block (1-30) and up against the first spherical washer (1-40).

3.2.6 Install extension retainer nut assembly (1-60) over extension rod assembly (1-50) and screw into guide block (1-30).

3.2.7 Tighten extension retainer nut assembly (1-60) until extension rod assembly (1-50) cannot move. Back off the extension retainer nut assembly (1-60) just enough to allow for extension rod assembly (1-50) to move freely.

NOTE:

Steps 3.2.8 through 3.2.13 are to be completed when the actuator is equipped with a spring module. If the actuator is double-acting then skip steps 3.2.8 through 3.2.13 and continue actuator reassembly starting with step 3.2.14.

3.2.8 Lubricate two spherical washers (9-40) and one extension rod assembly (9-50).

3.2.9 Install one spherical washer (9-40) into the side of guide block (1-30).

NOTE:

The spherical side of washer (9-40) will be facing to the outside of guide block (1-30).

3.2.10 Install second spherical washer (9-40) over threaded end of extension rod assembly (9-50).

NOTE:

The spherical side of the washer will go on the extension rod assembly facing the head of the extension rod assembly.

3.2.11 Install extension rod assembly (9-50) into guide block (1-30) and up against the first spherical washer (9-40).

3.2.12 Install extension retainer nut (9-60) over extension rod assembly (9-50) and screw into guide block (1-30).

3.2.13 Tighten extension retainer nut assembly (9-60) until extension rod assembly (9-50) cannot move. Back off the extension retainer nut assembly (9-60) just enough to allow for extension rod assembly (9-50) to move freely.

NOTE:

Steps 3.2.14 and 3.2.15 are to be completed when the actuator is double-acting and equipped with a Blind end cap extended stop screw.

3.2.14 Install guide block stop plug (5-50) into guide block (1-30).

3.2.15 Install and tighten rod extension retainer nut assembly (5-80) over guide block stop plug (5-50) and screw into guide block (1-30).

NOTE:

Consult Houston, Texas Bettis Service Coordinator for yoke bearing, yoke pin bearing or yoke/guide block bushing installation information.

3.2.16 If the two yoke bearings (2-40) are being replaced, install new bearing into housing cover (1-20) and housing (1-10).

NOTE:

The yoke bearing (2-40) must be pressed into housing (1-10) and housing cover (1-20). Install the yoke bearings with the bearing seam located 45° ±5° degrees from the yoke arm slot when yoke (1-70) is rotated to its full clockwise position.

3.2.17 If the two yoke pin bearings (2-10) are being replaced install new bearing into housing cover (1-20) and housing (1-10).

3.2.18 Lubricate two yoke/guide block bushings (2-30) and install onto top and bottom sides of guide block (1-30).

NOTE:

The guide block (1-30) should be already pre-assembled with extension rod assembly and associated parts assembled in the guide block.

3.2.19 Install guide block (1-30), with yoke guide block bearings (2-30), between arms of yoke (1-70).

3.2.20 Install one O-ring seal (2-50) into inner diameter seal groove in the bottom of housing (1-10).

3.2.21 Coat the bearing surfaces of yoke (1-70) with lubricant and install into housing (1-10).

3.2.22 Align hole in guide block (1-30) with the matching holes in the two yoke/guide block bushings (2-30) and the slots in the arms of yoke (1-70).

NOTE:

The yoke pin can be held in place by installing a screw into the .375-16UNC tapped hole in the upper end of yoke pin (1-80).

3.2.23 Install yoke pin (1-80) by inserting into the upper yoke arm, upper yoke/guide block bushing, guide block, lower yoke/guide block bushing, lower yoke arm and resting on lower yoke pin thrust bearing (2-10).

3.2.24 Install guide bar (1-90) into either side of housing (1-10) by inserting through the housing, through guide block and then insert the guide bar into the other side of housing (1-10).

3.2.25 Refer to Assembly Drawing page 2 of 2 Section A-A. Install spring pin (1-100) into the top of yoke (1-70).

3.2.26 Install position indicator assembly (1-140) onto the top of yoke (1-70) and over spring pin (1-100).

NOTE:
Refer to Section 2 step 2.3.7 for correct installation position.

3.2.27 Install O-ring (2-50) into housing cover (1-20).

3.2.28 Install O-ring seal (2-60) into housing cover (1-20).

3.2.29 Install housing cover (1-20), being careful not to damage O-ring seals (2-50) and (2-60).

3.2.30 Place lockwashers (1-115) onto hex cap screws (1-110).

NOTE:
On G/GC/GH/GHC7,8,10 and G13 model actuators apply thread adhesive, Loctite 242, to threads of hex cap screws (1-110). Reference Assembly Drawing note number 8.

3.2.31 Install hex cap screws (1-110) with lockwashers (1-115) through housing cover (1-20) and into housing (1-10).

NOTE:
Leave hex cap screws (1-110) finger tight - do not tighten.

NOTE:
Do this step only if groove pins (1-130) have been pulled or if the pins are being replaced. Drive groove pins (1-130) through housing cover (1-20) and into housing (1-10). The groove pins should be flush with the cover.

3.2.32 Torque tighten hex cap screws (1-110) until a final lubricated torque, as listed in the following table, has been achieved.

Table 2. Housing Cover Screw Quantity and Torque Table

MODEL G/GC/ GH/GHC	QTY	TORQUE (±5 % Percent)		MODEL G/GC/ GH/GHC	QTY	TORQUE (±5 % Percent)	
		Lbf-ft.	N-m			Lbf-ft.	N-m
G01	4	40	54	7	8	100	136
2	6	40	54	8	12	100	136
3	8	40	54	10	16	100	136
4	8	40	54	G13	20	340	461
5	8	100	136				

NOTE:
Complete step 3.2.34 on G/GC/GH/GHC5, 7, 8, 10 and G13 model actuators. For G01 and G/GC/GH/GHC2 through G/GC/GH/GHC4 model actuators skip step 3.2.34 and proceed to step 3.2.35.

3.2.33 On G/GC/GH/GHC5, 7, 8, 10 and G13 models

3.2.33.1 Place lockwashers (1-115) onto hex cap screws (1-120).

NOTE:

Hex cap screw (1-120) are only used as "hole" fillers and to protect threads from environment.

3.2.33.2 Install and tighten hex cap screws (1-120) with lockwashers (1-115).

3.2.34 Install thrust bearing (2-110) onto position indicator (1-140).

3.2.35 Install O-ring seal (2-100) onto position indicator (1-140).

3.2.36 Install upper bearing (2-120) into yoke cover (1-150).

3.2.37 Install rod wiper (2-80) into yoke cover (1-150).

3.2.38 Install O-ring seal (2-70) into yoke cover (1-150).

3.2.39 Install yoke cover (1-150) onto housing cover (1-20) and over position indicator assembly (1-140).

NOTE:

During yoke cover installation be careful not to damage O-ring seal (2-70) and rod wiper (2-80).

3.2.40 Place lockwashers (1-170) onto hex cap screws (1-160).

3.2.41 Install and tighten hex cap screws (1-160) with lockwashers through yoke cover (1-150) and into housing cover (1-20).

3.2.42 Vent check assembly installation as follows:

3.2.42.1 G01, G/GC/GH/GHC2 and G/GC/GH/GHC3 housing (1-10) using pipe sealant install one vent check assembly (13) into the front of housing (1-10).

3.2.42.2 G01, G/GC/GH/GHC2 and G/GC/GH/GHC3 housing (1-10) using pipe sealant install one vent check assemble (13) into the top area of housing cover (1-20).

3.2.42.3 G/GC/GH/GHC4,5,7,8,10 and G13 housing (1-10) using pipe sealant install two vent check assemblies (13) into the front of housing (1-10).

3.2.43 Refer to Section 2 step 2.3.3 for correct position indicator placement.
Install position indicator (1-220) over the exposed shaft of position indicator assembly (1-140).

3.2.44 Install stop screw nuts (1-190) onto stop screws (1-180).

3.2.45 Install O-ring (2-90) onto stop screws (1-180).

3.2.46 Install two stop screws (1-180) into two stop screw holes on the front of housing (1-10).

3.2.47 Adjust both stop screws (1-180) back to settings recorded earlier in Section 2 at step 2.3.2.

3.2.48 Tighten both stop screw nuts (1-190) securely.

3.3 Pneumatic Power Module Reassembly

NOTE:

For early model G2 and G3 actuators with double nuts on the power module use Section 3.4 for reassembly.

Refer to Section 2, step 2.1.4 for the correct installation location for piston rod (3-40).

THE ACTUATOR MUST BE IN THE APPROPRIATE OVERTRAVEL POSITION. Confirm over-travel position by observing the guide block (1-30) is against the inner wall of housing (1-10).

3.3.1 Lubricate piston rod (3-40) and insert through the side of housing (1-10).

3.3.1.1 G2 through G13 screw piston rod (3-40) onto extension rod assembly (1-50).

3.3.1.2 G01 only screw piston rod (3-40) onto guide block (1-30).

3.3.2 After confirming initial thread engagement rotate piston rod into extension rod assembly (1-50) as listed in the following table.

⚠ WARNING

After initial thread engagement the Piston rod must be rotated clockwise the minimum number of turns listed in the following table.

Table 3. Piston Rod Number of Turns Table

ACTUATOR MODEL G/GC/GH/GHC	MINIMUM NO TURNS
1	6
2	10
3	10
4	10
5	13
7	14
8	20
10	25
G13	31

3.3.3 Torque tighten piston rod (3-40) to the lubricated torque as listed in the following table.

Table 4. Piston Rod Required Torque Table

HOUSING MODEL G/GC/GH/GHC	TORQUE (±5 % Percent)		HOUSING MODEL G/GC/GH/GHC	TORQUE (±5 % Percent)	
	lbf-ft.	Nm		lbf-ft.	Nm
G01	90	122	7	240	325
2	90	122	8	240	325
3	90	122	10	240	325
4	240	325	G13	240	325
5	240	325	-	-	-

3.3.4 Refer to Assembly Drawing page 2 of 2 Detail "C". Install one rod wiper (4-10) into inner end cap (3-10).

3.3.5 Install one rod bushing (4-20) into inner end cap (3-10).

3.3.6 Coat one Polypak seal (4-30) with lubricant and install, lip first, into inner end cap (3-10).

⚠ CAUTION

Install the Polypak seal with energizer ring facing outboard side (away from housing).

3.3.7 Install one O-ring seal (4-90) into seal groove located on the inboard face of inner end cap (3-10).

3.3.8 Install inner end cap (3-10) on to housing (1-10).

NOTE:

The pressure inlet port should be positioned in the same position as recorded in Section 2.2, step 2.2.1.

3.3.9 Place lockwashers (3-110) onto hex cap screws (3-100).

3.3.10 Install and tighten hex cap screws (3-100) (GH/GHC7 model will have 4 more bolts than the standard G and 2 more bolts on the GH/GHC8,10 models than the standard G), with lockwashers, through housing (1-10) and into inner end cap (3-10).

3.3.11 Refer to Assembly Drawing page 2 of 2 Detail "D". Install one O-ring seal (4-70) into the seal groove in piston rod (3-40).

3.3.12 Apply lubricant to two sets of rod T-seal components (4-50).

NOTE:
The T-seal is composed of one rubber seal and two split skive-cut back-up rings.

3.3.12.1 Install two sets of rod T-seals (4-50) into the internal diameter seal grooves of piston (3-30).

3.3.12.2 Install a back-up ring on each side of the T-seal.

3.3.12.3 When installing the back-up rings, do not align the skive-cuts.

3.3.12.4 If the back-up rings are too long and the rings overlap beyond the skive-cuts, then the rings must be trimmed with a razor sharp instrument.

3.3.13 Install two split ring halves (3-50) into the inner most groove in piston rod (3-40) and retain by installing the recessed area of piston (3-30) onto the piston rod and over the two split ring halves (3-50).

3.3.14 Install two split ring halves (3-50) into the piston rod, in front of the piston installed in the previous step, and retain with retainer ring (3-60).

3.3.15 Install one O-ring seal (4-40) onto the outer diameter seal groove of inner end cap (3-10).

3.3.16 Coat one D-ring seal (4-60) with lubricant and install into the piston external seal groove.

NOTE:
The flat side of the D-ring seal go down into the seal groove.

3.3.17 Coat two tie bars (3-20) with lubricant and install by carefully pushing tie bars through piston (3-30) and rod T-seal (4-50).

3.3.18 Screw tie bars (3-20) into inner end cap (3-10) and tighten until the threads bottom out.

3.3.19 Refer to Assembly Drawing page 2 of 2 Detail "E". Coat two O-ring seals (4-80) with lubricant and install into outer end cap (3-80).

3.3.20 Apply lubricant to one O-ring seal (4-40) and install into the outer diameter O-ring groove of outer end cap (3-80).

3.3.21 Apply lubricant to the bore of cylinder (3-70).

⚠ CAUTION

If needed, when installing the cylinder, hammer on the end of the cylinder only with a non metallic object.

3.3.22 Install lubricated cylinder (3-70) over piston (3-30) and onto inner end cap (3-10). When installing the cylinder over the piston seal tilt cylinder 15 to 30 degrees to piston rod.

3.3.23 OUTER END CAP (3-80) INSTALLATION AS FOLLOWS: G01-M3 use step 3.3.23.1, G2-M3 and G3-M3 use step 3.3.23.2 and standard outer end cap use step 3.3.23.3.

NOTE:
The outer end cap (3-80) pressure inlet port should be positioned in the same position as recorded in Section 2.2, step 2.2.1.

3.3.23.1 G01-M3 OUTER END CAP INSTALLATION

3.3.23.1.1 Apply a light coating of lubricant to threads of jackscrew (3-290).

3.3.23.1.2 Screw jackscrew adapter (3-280) onto jackscrew (3-290).

NOTE:
The smaller round end of the jackscrew adapter will install on the jackscrew pointing to the outboard end of the jackscrew.

3.3.23.1.3 Position the jackscrew with the inboard end of the jackscrew located with the needle bearing thrust washer assembly (3-350) up against or near the jackscrew adapter (3-280).

3.3.23.1.4 Lightly lubricate O-ring seal (6-20) and install into O-ring groove on the outboard side of the jackscrew adapter (3-280).

3.3.23.1.5 Insert jackscrew (3-290) through inboard side of the outer end cap (3-80).

3.3.23.1.6 Install outer end cap (3-80) over tie bars (3-20) and into cylinder (3-70).

3.3.23.1.7 Install tie bar nuts (3-90) onto tie bars (3-20).

NOTE:
Do not tighten nuts.

3.3.23.1.8 Install the jackscrew adapter keeper (3-360) into the groove exposed on the outboard side of the jackscrew adapter (3-280).

3.3.23.1.9 Lightly lubricate O-ring seal (6-30) and install onto the outboard end of the jackscrew. Push the O-ring (6-30) down the jackscrew until it contacts the jackscrew adapter (3-280).

3.3.23.1.10 Install flat hex nut (3-300) onto jackscrew (3-290). Rotate the flat hex nut (3-290) until it is up against O-ring seal (6-30).

3.3.23.1.11 Install outer end cap (3-80) over tie bars (3-20) and into cylinder (3-70). Continue at step 3.3.24.

3.3.23.2 G/GC/GH/GHC 2 and G/GC/GH/GHC 3-M3 OUTER END CAP INSTALLATION

3.3.23.2.1 Lightly lubricate O-ring seal (6-10) and install into O-ring groove in the M3 hole in the outer end cap (3-80).

3.3.23.2.2 Install the jackscrew (3-290) through the outboard side of the outer end cap (3-80).

3.3.23.2.3 Apply a light coating of lubricant to threads of jackscrew (3-290).

3.3.23.2.4 Screw jackscrew adapter (3-280) onto jackscrew (3-290).

NOTE:

The small round end of the M3 adapter will install on the jackscrew pointing to the inboard end of the jackscrew.

3.3.23.2.5 Position the jackscrew with the inboard end of the jackscrew located with the needle bearing thrust washer assembly (3-340) up against or near the jackscrew adapter (3-280).

3.3.23.2.6 Install outer end cap (3-80) over tie bars (3-20) and into cylinder (3-70).

3.3.23.2.7 Install tie bar nuts (3-90) onto tie bars (3-20).

NOTE:

Do not tighten nuts.

3.3.23.2.8 Install two socket cap screws (3-320) through jackscrew adapter (3-280) and tighten into the outer end cap (3-80).

3.3.23.2.9 Lightly lubricate O-ring seal (4-150) and install onto the outboard end of the jackscrew. Push the O-ring (4-150) down the jackscrew until it contacts the jackscrew adapter (3-280).

3.3.23.2.10 Install flat hex nut (3-300) onto jackscrew (3-290). Rotate the flat hex nut (3-300) until it is up against the O-ring seal (4-150).

⚠ WARNING

Excessive tightening could damage the seal (4-150) and prevent it from sealing properly. Nut should be hand-tight plus 1/4 to 1/2 turn.

3.3.23.2.11 Install outer end cap (3-80) over tie bars (3-20) and into cylinder (3-70). Continue at step 3.3.24.

3.3.23.3 STANDARD OUTER END CAP INSTALLATION Install outer end cap (3-80) over tie bars (3-20) and into cylinder (3-70).

3.3.24 Install tie bar nuts (3-90) onto tie bars (3-20). Torque tighten tie bar nuts, alternately in 100 foot pound / N-m increments, until a final lubricated torque, as listed in the following table, has been achieved.

Table 5. Tie Bar Nuts Required Torque Table

HOUSING MODEL	TORQUE (±5 % Percent)		HOUSING MODEL	TORQUE (±5 % Percent)	
	lbf-ft.	Nm		lbf-ft.	N-m
G01	120	163	G7/GH5	500	678
G2	120	163	G8/GH7	500	678
G3/GH2	150	203	G10/GH8	1200	1627
G4/GH3	150	203	G13/GH10	1600	2169
G5/GH4	400	542			

3.3.25 Install lockwashers (3-140) onto socket cap screws (3-130).

3.3.26 Install and tighten socket cap screws (3-130), with lockwashers (3-140), into outer end cap (3-80).

NOTE:

If the outer end cap (3-80) has an ES stop screw completed steps 3.3.26 through 3.3.29.

3.3.27 If not already removed then remove hex nut (3-190) and old O-ring seal (4-100).

3.3.28 Install new O-ring seal (4-100) onto the ES stop screw and up against outer end cap (3-80).

3.3.29 Install hex nut (3-140) on to ES. After adjusting to proper position tighten ES stop screw.

NOTE:

Step 3.3.29 is not required if the power module is equipped with an ES stop screw or a M3 jackscrew.

3.3.30 If removed, using pipe dope, install pipe plug (3-120) into outer end cap (3-80).

3.3.31 Apply sufficient pneumatic pressure to outer end cap (3-80) pressure inlet port to move the piston to its full inboard position (next to inner end cap).

3.3.32 Remove pneumatic pressure from outer end cap (3-80).

3.3.33 Install breather assembly (12) in outer end cap (3-80).

NOTE:

Individual actuators may not have reducer bushing (14) depending on port and breather size.

3.4 G2 and G3 Early Model Pneumatic Power Module Reassembly

NOTE:

Early G2 and G3 pneumatic power modules where equipped with tie bars that had nuts on both ends of the tie bars (3-20) – double nuts.

Refer to Section 2, step 2.1.4 for the correct installation location for piston rod (3-40).

THE ACTUATOR MUST BE IN THE APPROPRIATE OVERTRAVEL POSITION.
Confirm over-travel position by observing the guide block (1-30) is against the inner wall of housing (1-10)

3.4.1 Refer to Assembly Drawing page 2 of 2 Detail "C". Install one rod wiper (4-10) into inner end cap (3-10).

3.4.2 Install one rod bushing (4-20) into inner end cap (3-10).

3.4.3 Coat one Polypak seal (4-30) with lubricant and install, lip first, into inner end cap (3-10).

⚠ CAUTION

Install the Polypak seal with energizer ring facing outboard side of inner end cap (3-10).

3.4.4 Install piston rod (3-40) through inner end cap (3-10).

NOTE:

The piston rod end with retainer grooves to be on the outboard side of inner end cap (3-10).

3.4.5 Apply lubricant to two sets of rod T-seal components (4-50).

NOTE:

The T-seal is composed of one rubber seal and two split skive-cut back-up rings.

3.4.5.1 Install two sets of rod T-seals (4-50) into the internal diameter seal grooves of piston (3-30).

3.4.5.2 Install a back-up ring on each side of the T-seal.

3.4.5.3 When installing the back-up rings, do not align the skive-cuts.

3.4.5.4 If the back-up rings are too long and the rings overlap beyond the skive-cuts, then the rings must be trimmed with a razor sharp instrument.

3.4.6 Coat one D-ring seal (4-60) with lubricant and install into the piston external seal groove.

NOTE:

The flat side of the D-ring seal goes down into the seal groove.

3.4.7 Install piston (3-30) onto piston rod (3-40).

NOTE:

The cast rib side of the piston is to be facing away from the outboard side of inner end cap (3-10) or position piston (3-30) on the piston rod so that the retainer grooves are on the out board side of the piston.

3.4.8 Refer to Assembly Drawing page 2 of 2 Detail "D". Install O-ring seal (4-70) into the seal groove in the outboard end of piston rod (3-40).

3.4.9 Install two split ring halves (3-50) into the outer most groove in piston rod (3-40) and retain by installing the recessed area of piston (3-30) over the two split halves (3-50).

3.4.10 Install two split ring halves (3-50) into the piston rod, in back of the piston and retain with retainer ring (3-60).

3.4.11 Coat two tie bars (3-20) with lubricant and install by carefully pushing tie bars through piston (3-30) and rod T-seal (4-50).

3.4.12 Install two tie bar O-ring seals (4-80) onto the inboard end of tie bars (3-20) and into the O-ring grooves provided.

3.4.13 Insert the tie bars through inner end cap (3-10) and screw hex nuts (3-90) onto inboard end of the tie bars.

NOTE:

Screw the tie bars through the hex nuts (3-90) until one complete thread is exposed.

3.4.14 Refer to Assembly Drawing page 2 of 2 Detail "E". Install two tie bar O-ring seals (4-80) onto the outboard end of tie bars (3-20) and into the O-ring grooves provided.

3.4.15 Apply lubricant to one O-ring seal (4-40) and install into the outer diameter O-ring groove of outer end cap (3-80).

3.4.16 Apply lubricant to the bore of cylinder (3-70).

⚠ CAUTION

If needed, when installing the cylinder, hammer on the end of the cylinder only with a non-metallic object.

3.4.17 Install lubricated cylinder (3-70) over piston (3-30) and onto inner end cap (3-10). When installing the cylinder over the piston seal tilt cylinder 15 to 30 degrees to piston rod.

NOTE:

If the power module is equipped with a M3 jackscrew pre-assemble the M3 jackscrew to the outer end cap (3-80) per Section 3.6.

3.4.18 Install outer end cap (3-80) over tie bars (3-20) and into cylinder (3-70).

NOTE:

The pressure inlet port should be positioned in the same position as recorded in Section 2.2, step 2.2.1.

3.4.19 Install tie bar nuts (3-90) onto tie bars (3-20). Torque tighten tie bar nuts, alternately in 100 foot pound increments, until a final lubricated torque, as listed in the following table, has been achieved.

Table 6. Early G2 and G3 Tie Bar Nuts Required Torque Table

HOUSING MODEL	TORQUE (±5 % Percent)		HOUSING MODEL	TORQUE (±5 % Percent)	
	lbf-ft.	Nm		lbf-ft.	Nm
G2	120	163	G3	150	203

3.4.20 Install lockwashers (3-140) onto socket cap screws (3-130).

3.4.21 Install and tighten socket cap screws (3-130), with lockwashers (3-140), into outer end cap (3-80).

3.4.22 Install pneumatic power module per Section 5 steps 5.4.

3.5 Blind End Cap Module Reassembly

NOTE:

If the blind end cap has an M3 jackscrew or ES stop screw that has been removed from the blind end cap then pre-assemble the M3 or ES into the blind end cap per Section 3.6 or 3.8.

3.5.1 Install O-ring seal (6-10) into the O-ring groove in blind end cap (5-10).

3.5.2 Install lockwashers (5-30) onto hex cap screws (5-20).

NOTE:

Verify that steps 3.2.14 and 3.2.15 have been completed prior to commencing with step 3.5.3.

3.5.3 Install blind end cap (5-10) onto end of housing (1-10).

3.5.4 Install and tighten hex cap screws (5-20) with lockwashers (5-30) through housing. (1-10) and into blind end cap (5-10).

3.6 M3 Jackscrew Reassembly

NOTE:

This section is to be completed when the M3 jackscrew has been disassembled from the blind end cap or from the SR-M3 adapter plate (7-10).

If the thrust bearing assembly has been disassembled from the M3 jackscrew stud then pre assemble the thrust bearing assembly to the M3 jackscrew stud as per Section 3.6.5.

3.6.1 G01-M3 JACKSCREW REASSEMBLY TO M3 BLIND END CAP

3.6.1.1 Apply a light coating of lubricant to threads of M3 assembly (5-50).

3.6.1.2 Screw M3 adapter (5-45) onto M3 assembly (5-50).

NOTE:

The smaller round end of the M3 adapter will install on the M3 assembly pointing to the outboard end of the M3 assembly.

3.6.1.3 Position the M3 assembly with the inboard end of the M3 located with the needle bearing thrust washer assembly (5-100) up against or near the M3 adapter (5-45).

3.6.1.4 Lightly lubricate O-ring seal (6-20) and install into O-ring groove on the outboard side of the M3 adapter (5-45).

3.6.1.5 Insert M3 assembly (5-50) through inboard side of the M3 blind end cap (5-10).

3.6.1.6 Install the jackscrew adapter keeper (5-140) into the groove exposed on the outboard side of the M3 adapter (5-45).

3.6.1.7 Lightly lubricate O-ring seal (6-30) and install onto the outboard end of the M3 jackscrew assembly. Push the O-ring (6-30) down the M3 until it contacts the M3 adapter (5-45).

3.6.1.8 Install flat hex nut (5-60) onto M3 assembly (5-50). Rotate the flat hex nut (5-60) until it is up against the O-ring seal (6-30).

3.6.2 G2-M3 and G3-M3 JACKSCREW REASSEMBLY TO M3 BLIND END CAP

3.6.2.1 Lightly lubricate O-ring seal (6-10) and install into O-ring groove in the M3 hole in the blind end cap (5-10).

3.6.2.2 Install the M3 jackscrew assembly (5-50) through the inboard side of the blind endcap (5-10).

3.6.2.3 Apply a light coating of lubricant to threads of M3 assembly (5-50).

3.6.2.4 Screw M3 adapter (5-45) onto M3 jackscrew assembly (5-50).

NOTE:

The small round end of the M3 adapter will install on the M3 assembly pointing to the inboard end of the M3 assembly.

3.6.2.5 Position the M3 assembly with the inboard end of the M3 located with the needle bearing thrust washer assembly (5-100) up against or near the M3 adapter (5-45).

3.6.2.6 Install two socket cap screws (5-120) through jackscrew adapter (5-45) and tighten into blind end cap (5-10).

3.6.2.7 Lightly lubricate O-ring seal (6-30) and install onto the outboard end of the M3 jackscrew assembly. Push the O-ring (6-30) down the M3 until it contacts the M3 adapter (5-45).

3.6.2.8 Install flat hex nut (5-60) onto M3 assembly (5-50). Rotate the flat hex nut (5-60) until it is up against the O-ring seal (6-30).

3.6.3 G01-SR-M3 JACKSCREW REASSEMBLY TO M3-SR ADAPTER PLATE

3.6.3.1 Apply a light coating of lubricant to the threads of jackscrew assembly (7-40).

3.6.3.2 Install jackscrew adapter (7-45) onto the nonbearing end of jackscrew assembly (7-40).

3.6.3.3 Install jackscrew adapter (7-45) through M3 adapter plate (7-10).

3.6.3.4 Retain jackscrew adapter (7-45) with retainer ring (7-55).

3.6.4 G2-M3 and G3-SR-M3 JACKSCREW REASSEMBLY TO M3-SR ADAPTER PLATE

3.6.4.1 Apply a light coating of lubricant to the threads of jackscrew assembly (7-40).

3.6.4.2 Install jackscrew adapter (7-45) onto the nonbearing end of M3 assembly (7-40).

3.6.4.3 Install jackscrew adapter (7-45) through adapter plate (7-10).

3.6.4.4 Install two socket cap screws (7-120) through jackscrew adapter (7-45) and tighten into adapter plate (7-10).

3.6.5 M3 THRUST BEARING REASSEMBLY TO JACKSCREW ASSEMBLY

3.6.5.1 Apply a coating of lubricant to the internal hole located on the inboard end of M3 assembly (5-40) / (7-50).

3.6.5.2 Install the wire retainer ring (5-90) / (7-90) into the internal hole of M3 assembly until retainer ring opens up into its groove inside the M3 assembly.

3.6.5.3 Pre-assemble the needle bearing thrust washer assembly (5-100) / (7-100) as follows:

3.6.5.3.1 Apply lubricant to one thrust washer and install onto bearing retainer (5-110) / (7-110).

3.6.5.3.2 Apply lubricant to needle bearing and install onto bearing retainer (7-110) and up against thrust washer installed in step 3.6.5.3.1.

3.6.5.3.3 Apply lubricant to the remaining thrust washer and install onto bearing retainer (5-110) / (7-110) and up against the needle bearing installed in step 3.6.1.3.2.

3.6.5.4 Install the pre-assembled needle bearing thrust washer assembly (5-100) / (7-100) into the open hole located on the inboard end of M3 assembly (5-50) / (7-40).

NOTE:

Press or push the bearing retainer (5-110) / (7-110) into the M3 assembly forcing the retainer ring (5-90) / (7-90) onto the neck of the bearing retainer (5-110) / (7-110).

3.7 M3 Handwheel or M3 Hex Drive Hub Installation

3.7.1 M3 HANDWHEEL OR HEX DRIVE HUB INSTALLATION TO M3 JACKSCREW

3.7.1.1 Install handwheel or hex drive hub (10-10) onto M3 jackscrew (7-40).

3.7.1.2 Install two grooved pins (10-20) and (10-30) through handwheel hub or hex drive hub (10-10) and through M3 jackscrew (7-40).

3.7.2 EARLY MODEL G2 and G3 M3 HANDWHEEL AND HEX NUT INSTALLATION

3.7.2.1 Screw the slotted nut onto the outboard end of the M3 jackscrew with the slot facing toward the cylinder end cap. Screw the nut until one of the slots in the nut is aligned with the cross drilled "through hole" in the stud.

⚠ CAUTION

When aligning the slot and the cross drilled hole make certain that the back of the slot is at least one thread from being aligned with the hole.

3.7.2.2 Insert the spiral pin through the slotted nut and through the jackscrew stud making sure that equal amounts of the spiral pin is exposed on both sides of the slotted nut and the jackscrew stud.

3.7.2.3 For actuators equipped with a M3 jackscrew and require an optional handwheel, install handwheel using the following procedure:

3.7.2.3.1 Place the handwheel onto M3 jackscrew and over the pinned slotted nut.

NOTE:

The hub of handwheel has a cast hexagon hole that fits over the pinned slotted nut.

3.7.2.3.2 Place lockwasher onto M3 jackscrew up against handwheel hub.

3.7.2.3.3 Install and tighten hex nut onto M3 jackscrew and screw nut up against the lockwasher.

3.8 Extended Stop Blind End Cap Reassembly

3.8.1 Apply a light coating of lubricant to the threads of ES stop screw (5-50).

3.8.2 Install hex nut (5-60) onto the ES stop screw (5-50).

3.8.3 Install ES stop screw (5-50) through ES blind end cap (5-10).

3.9 Actuator Testing

3.9.1 Leakage Test - All areas where leakage to atmosphere may occur are to be checked, using a commercial leak testing solution.

⚠ CAUTION

Pressure applied to the actuator is not to exceed the maximum operating pressure rating listed on the actuator name tag. Test the actuator using a properly adjusted self relieving regulator, with gauge.

3.9.2 Cycle the actuator five times at the nominal operating pressure (NOP) as listed on the actuator name tag or the customer's normal actuator supply pressure. If excessive leakage across the pistons is noted, generally a bubble which breaks three seconds or less after starting to form, cycle the actuator five times as this will allow the seals to seek their proper service condition.

3.9.3 Apply NOP pressure to the pressure port in inner end cap (3-10) and allow the actuator to stabilize.

3.9.4 Apply a commercial leak testing solution to the following areas:

3.9.4.1 Joint between inner end cap (3-10) and cylinder (3-70). This checks cylinder to inner end cap O-ring seal.

3.9.4.2 The port hole in the outer end cap (3-80). This checks the piston D-seal to cylinder (3-70), O-ring seal (4-70), and rod T seal (4-50).

NOTE:

If excessive leakage across the piston remains, the actuator must be disassembled and the cause of leakage must be determined and corrected.

3.9.4.3 The vent check port hole in housing. This checks Polypak seal (4-30) that seals piston rod (3-40) to inner end cap (3-10).

3.9.4.4 Remove pressure from the pressure inlet port.

3.9.5 If an actuator was disassembled and repaired, the above leakage test must be performed again.

3.9.6 Shell Pressure Test – Optional pressure test could be performed on PED certified actuator by applying pressure to both sides of the piston simultaneously for a period of two (2) minutes. If any leakage occurs across a static seal, the unit must be disassembled and the cause of leakage determined and corrected.

⚠ WARNING

The actuators main pressure bearing parts will be tested in controlled conditions in accordance with the requirement of PED by pressuring both sides of the piston to avoid damage and over torquing of the actuator components. If further future testing in the field is necessary, Emerson should be contacted for guidance.

Section 4: Field Conversions

4.1 Fail Mode Reversal (CW to CCW, Or CCW to CW) for G and GH Only

NOTE:
GC/GHC actuators must not undergo fail mode reversal without specific knowledge and acceptance of the resulting torque output. If a symetrical yoke is being used during the process, then fail mode reversal will not affect the torque output.

4.1.1 Remove spring module per Section 5.1.

4.1.2 Remove pneumatic power module per Section 5.3.

4.1.3 Reinstall the spring module onto the opposite end of housing (1-10), as it was previously located per Section 5.2.

4.1.4 Reinstall the pneumatic power module onto the opposite end of housing (1-10) as it was previously located per Section 5.4.

4.2 Converting Double-Acting Actuator to Spring-Return

4.2.1 Remove the blind end cap module per Section 2.4.

4.2.2 If pneumatic power module needs to be relocated due to fail mode requirements (fail counter-clockwise) use Section 5.3 for removal and Section 5.4 for installation.

NOTE:
Skip step 4.2.3 when working on G01-SR models and continue at step 4.2.4.

4.2.3 Install the SR Powr Swivl Module per Section 5.6.

4.2.4 Install the spring module per Section 5.2.

4.3 Converting Spring-Return Actuator to Double-Acting

4.3.1 Remove the spring cartridge per Section 5.1.

4.3.2 If pneumatic power module needs to be relocated due to fail mode requirements (fail counter-clockwise) use Section 5.3 for removal and Section 5.4 for installation.

NOTE:
Skip step 4.3.3 when working on G01-SR models and continue at step 4.3.4.

4.3.3 Remove the spring cartridge Powr Swivl Module per Section 5.5.

4.3.4 Install the blind end cap module per Section 3.5.

4.4 Add an M3 Jackscrew to Blind End Cap Module

4.4.1 Remove blind end cap module per Section 2.4.

4.4.2 If new M3 blind end cap module is not pre assembled with the M3 then assembly M3 to the blind end cap (5-10) per Section 3.6 steps 3.6.1 or 3.6.2.

4.4.3 Install the assembled M3 blind end cap module per Section 3.5.

4.4.4 To install the M3 Handwheel or M3 drive hub refer to Section 3.7.

4.5 Add an M3 Jackscrew to Power Module Outer End Cap

4.5.1 Remove outer end cap (3-80) per Section 2.2 steps 2.2.5 and 2.2.6.

4.5.2 If new M3 outer end cap (3-80) is not pre assembled with the M3 then assembly M3 to the outer end cap (3-80) per Section 3.3 steps 3.3.22.1 or 3.3.22.2.

4.5.3 Install the assembled M3 outer end cap (3-80) per Section 3.3 steps 3.3.23.1.11 or 3.3.22.2.11 and 3.3.24 through 3.3.26.

4.5.4 To install the M3 Handwheel or M3 drive hub refer to Section 3.7.

4.6 Add an M3 Jackscrew to Spring Module

4.6.1 Remove G-SR (7-10) adapter plate per Section 5.1 steps 5.1.2 and 5.1.3.

4.6.2 If new M3 G-SR adapter plate (7-10) is not pre assembled with the M3 then assembly M3 to the G-SR cover plate (7-10) per Section 3 steps 3.6.3 or 3.6.4.

4.6.3 Install the assembled M3 adapter plate (7-10) onto the spring cartridge out end per Section 5.2, steps 5.2.11 through 5.2.15.

4.6.4 To install the M3 Handwheel or M3 drive hub refer to Section 3.7.

4.7 Add an Extended Stop (ES) to Blind End Cap Module

4.7.1 Remove blind end cap module per Section 2.4.

4.7.2 If new ES blind end cap module is not pre assembled with the ES then assembly ES to the blind end cap per Section 3.8.

4.7.3 Install the assembled ES blind end module per Section 3.5.

4.8 Add an Extended Stop (ES) to Power Module Outer End Cap

4.8.1 Remove outer end cap per Section 2.2, steps 2.2.5 and 2.2.6.

4.8.2 If new ES outer end cap is not pre assembled with the ES then assembly ES to the end cap per Section 3.8.

4.8.3 Install the assembled ES outer end (3-80) per Section 3.3, steps 3.3.22.3, 3.3.24 through 3.3.26.

4.9 Add an Extended Stop (ES) to Spring Module

4.9.1 Remove G-SR (7-10) adapter plate per Section 5.1, steps 5.1.2 and 5.1.3.

4.9.2 If new ES G-SR adapter plate (7-10) is not pre assembled with the ES then assembly ES to the G-SR cover plate as follows:

4.9.2.1 Install ES stud (7-40) into adapter plate (7-10).

4.9.2.2 Install O-ring seal (6–30) onto outboard end of ES (7-40) and up against outboard side of adapter plate (7-10).

4.9.2.3 Install stop screw nut (7-50) onto outboard end of ES (7-40).

4.9.3 Install the assembled ES adapter plate (7-10) onto the spring cartridge out end per Section 5.2, steps 5.2.11 through 5.2.15.

Section 5: Module Removal and Installation

NOTE:
When the spring module is to be removed it should be removed from the drive module prior to the pneumatic power module removal or disassembly.

⚠ WARNING

Do not remove spring module while spring is compressed.

⚠ WARNING

Actuators equipped with a spring cartridge mounted M3 jackscrew or an extended stop (ES) read warning tag wired to the spring cartridge cover plate.

5.1 Spring Module Removal

⚠ WARNING

Do not remove spring module while spring is compressed.

NOTE:
Review Section 2.1 General Disassembly before proceeding with Spring Module Disassembly.

NOTE:
The setting of stop screws (1-180) should be checked and setting recorded before stop screws are loosened or removed.

NOTE:
G2-SRF and G3-SRF use step 5.1.1. G01-SR, G2-SR, G3-SR through G13 skip step 5.1.1 and start at step 5.1.2.

5.1.1 G2-SRF and G3-SRF unscrew and remove pipe plug (7-10) from spring cartridge assembly (5-10). Skip steps 5.1.2, 5.1.3 and start at step 5.1.4.

⚠ WARNING

If an M3, M3HW jackscrew or extended stop (ES) is mounted in the spring module cover plate (7-10), the M3, M3HW or ES should not contact the end of the spring module tension rod.

5.1.2 Unscrew hex cap screws (7-20) with lockwashers (7-30) from cover plate (7-10) or if spring module has a M3-SR adapter plate (7-10) or a SR-ES adapter plate remove safety wire from hex cap screws (7-20) and then remove hex cap screws (7-20).

5.1.3 Remove the cover plate (7-10) from spring cartridge assembly (5-10).

5.1.4 Apply pneumatic pressure to inner end cap (2-40) port “A” to compress the spring enough to move the yoke off the stop screw on the spring module side of the drive module.

5.1.5 Loosen the stop screw nut (1-190) located on the stop screw that is closest to or next to spring module.

5.1.6 Unscrew stop screw (1-180) that is closest to or next to spring module (unscrew or back out until the load is removed from the stop screw).

5.1.7 Remove pneumatic pressure from pressure inlet port of inner end cap (3-10).

⚠ CAUTION

Due to the weight and size of spring cartridge assembly (5-10), heavy duty support equipment will be required when removing spring cartridge assembly from the actuator housing. Refer to Section 6 for spring cartridge module weights.

5.1.8 The spring cartridge "pre-load" must be removed before spring cartridge assembly (5-10) is removed from housing (1-10). Refer to steps 5.1.4 through 5.1.6 for spring cartridge "pre-load" removal.

5.1.9 Remove breather assembly (12) from outer end cap (3-80) port “B”.

⚠ CAUTION

The maximum pressure to be applied in step 5.1.10 is 25 psig.

5.1.10 Apply pneumatic pressure, not to exceed the maximum as indicated in the above “CAUTION”, to the pressure inlet port “B” of outer end cap (3-80) to move the spring cartridge tension rod hex nut out of its cast hex seat.

NOTE:

If pneumatic pressure is not available to apply to the pressure inlet port “B” located in outer end cap (3-80) then remove pipe plug (3-120) or if equipped with an extended stop (ES) remove the ES. Using a long rod go through the outer end cap pipe plug or ES vacant port hole and push on the piston rod so as to move the spring cartridge tension rod hex nut out of its cast hex seat.

5.1.11 Unscrew the spring cartridge tension rod from the drive module. The tension rod can be rotated for removal by going through the open end of spring cartridge assembly with a square male drive extension.

5.1.12 Remove hex cap screws (5-20) with lockwashers (5-30) from housing (1-10).

5.1.13 Remove spring cartridge assembly (5-10) from actuator housing (1-10).

⚠ WARNING

Under no circumstances should the spring cartridge assembly (5-10) be cut apart, as the spring is pre-loaded and the spring cartridge is a weld assembly.

5.2 Spring Module Installation

⚠ CAUTION

Due to the weight and size of spring module, heavy duty support equipment will be required when installing spring cartridge module to the actuator housing. For the approximate weight of the spring cartridge refer to Section 6.

⚠ WARNING

Actuator must be in the appropriate overtravel position (Refer to detail “A” on warning tag attached to spring module access hole cover or to Bettis drawing part number 130084 for G01 models or part number 123650 for G2 through G13 models). Confirm over-travel position by observing the guide block (1-30) is against the inner wall of housing (1-10).

NOTE:

The setting of stop screws (1-180) should be checked and setting recorded before stop screws are loosened or removed.

5.2.1 On stop screw (1-180), that is located on the same side of the housing as spring cartridge (5-10), loosen stop screw nut (1-190).

5.2.2 Unscrew or back out stop screw (1-180) to achieve over-travel as illustrated in detail “A” on warning tag attached to spring module cover plate or to Bettis drawing part number 123650.

5.2.3 Install O-ring seal (6-20) into the O-ring groove in the inboard end of spring cartridge assembly (5-10).

5.2.4 Using lifting equipment move spring module up to housing (1-10) and align spring cartridge tension rod with extension rod assembly (9-50) for G2 through G13 models or G01 models align spring cartridge with tapped hole in guide block (1-30).

⚠ WARNING

Complete step 5.2.5 To avoid severe injury to personnel or incur major damage to the actuator.

5.2.5 Spring cartridge tension rod to rod extension installation as follows:

5.2.5.1 Using a male square drive extension, go through the open end of spring odule (5-10) and rotate the tension rod nut until initial thread engagement is achieved.

NOTE:

Confirm initial thread engagement of rod extension (9-50) to tension rod; or for GH/GHC models, confirm initial thread engagement of tension rod to guide block.

5.2.5.2 After confirming initial thread engagement rotate tension rod into extension rod assembly (9-50) per the following table.

⚠ WARNING

After initial thread engagement the tension rod must be rotated clockwise the minimum number of turns listed in the following table.

Table 7. Early G2 and G3 Tension Rod Number of Turns Table

ACTUATOR MODEL G/GC/GH/GHC	MINIMUM NO TURNS
1	6
2	10
3	10
4	10
5	13
7	14
8	20
10	25
G13	31

⚠ WARNING

When screwing tension rod into extension rod assembly (9-50) make certain that the tension rod and extension rod assembly threads do not cross-thread.

5.2.6 Torque tighten the spring cartridge tension rod as listed in the following table.

Table 8. Spring Cartridge Tension Rod Torque Table

HOUSING MODEL G/GC/GH/GHC	TORQUE (±5 % Percent)		HOUSING MODEL G/GC/GH/GHC	TORQUE (±5 % Percent)	
	lbf-ft.	Nm		lbf-ft.	Nm
G01	50	68	7	240	325
2	90	122	8	240	325
3	90	122	10	240	325
4	240	325	G13	240	325
5	240	325	-	-	-

5.2.7 Install lock washers (5-30) onto hex cap screws (5-20).

5.2.8 Install hex cap screws (5-20) with lockwashers (5-30) through housing (1-10) and into spring cartridge assembly (5-10) and tighten.

5.2.9 Install O-ring seal (6-10) into the O-ring groove in the outboard end of spring cartridge assembly (5-10).

NOTE:

G2-SRF and G3-SRF use step 5.2.10. G01-SR, G2-SR, G3-SR through G13-SR skip step 5.2.10 and start at step 5.2.11.

5.2.10 Using pipe sealant on the threads install pipe plug (7-10) in the vacant hole in out board end of spring cartridge assembly (5-10). Skip steps 5.2.10 through 5.2.13 and start at step 5.2.14.

5.2.11 Install lockwashers (7-30) onto hex cap screws (7-20).

5.2.12 Install the cover plate (7-10) or install M3 adapter plate (7-10) onto the outboard end of spring cartridge assembly (5-10).

5.2.13 Install and tighten hex cap screws (7-20) with lockwashers (7-30) through cover plate (7-10) and into spring cartridge assembly (5-10).

5.2.14 Torque tighten hex cap screws (7-20) until a final lubricated torque, as listed in the following table, has been achieved.

Table 9. Hex Cap Screws (7-20) Torque Table

HOUSING MODEL G/GC/GH/GHC	TORQUE (±5 % Percent)		HOUSING MODEL G/GC/GH/GHC	TORQUE (±5 % Percent)	
	lbf-ft.	Nm		lbf-ft.	Nm
G01	30	41	7	135	183
2	30	41	8	240	325
3	30	41	10	285	386
4	65	88	G13	340	461
5	65	88	-	-	-

5.2.15 On M3, M3HW and ES models install Monel wire (6-130) through each hex cap screw (7-20) per the following steps:

NOTE:

The following steps provide guidelines for wire locking hex cap screws to discourage screw loosening and removal in applications where screw removal could be hazardous.

5.2.15.1 Make sure hex cap screws are tightened to their specified torque.

5.2.15.2 Using required lengths of .31 diameter Monel wire as provided in the module ordered. When replacing Monel wire use the following table for wire length requirements.

Table 10. Wire Length Requirements

MODEL G/GC/GH/GHC	LENGTH	
	Inch	mm
G01-SR	36	914.4
2-SR	44	1117.6
3-SR	48	1219.2
4-SR	55	1397.0

MODEL G/GC/GH/GHC	LENGTH	
	Inch	mm
5-SR	66	1676.4
7-SR	79	2006.6
8-SR	88	2235.2
G10-SR	110	2794.0

5.2.15.3 Twist the end of both wires together and insert one through the drilled hole in the hex cap screw head, pass the second wire over the screw head and twist it three (3) times around the first wire at a location where the first wire exits the screw head.

5.2.15.4 Repeat the procedure until the second wire is twist tied to the screw head through wire of the last screw head.

5.2.15.5 Attach caution tag and twist tie the wires from the last screw head to the twisted wires of the first screw head. See following for illustration.

Figure 1 Tag Attachment Guide

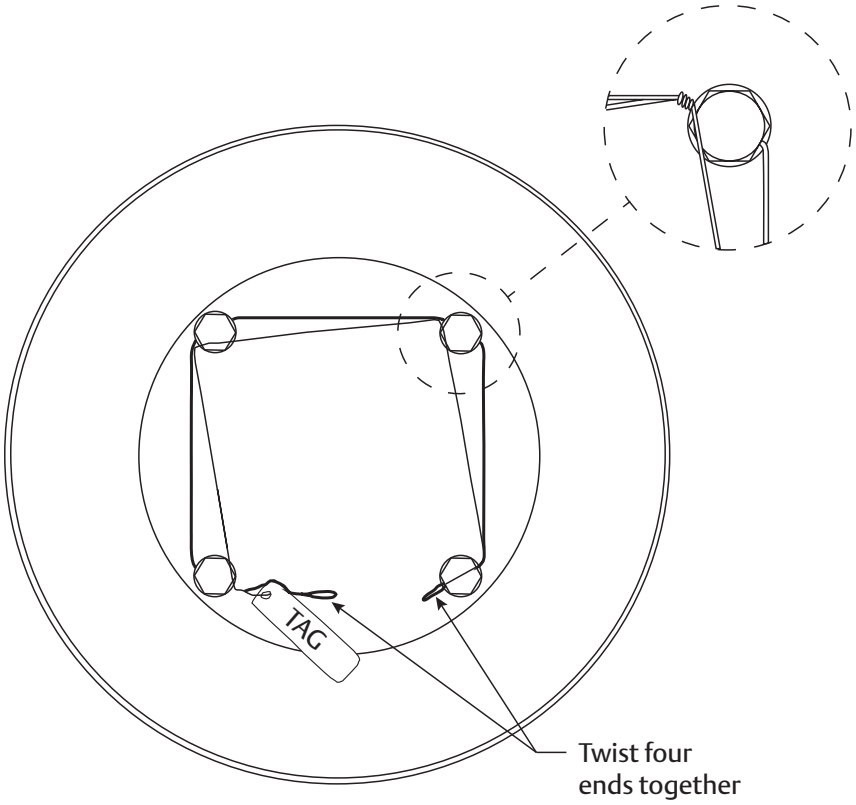

5.2.16 If removed install stop screw nuts (1-190) onto stop screws (1-180).

5.2.17 If removed install O-ring (2-90) onto stop screws (1-180).

5.2.18 If removed install two stop screws (1-180) into two stop screw holes on the front of housing (1-10).

5.2.19 Adjust both stop screws (1-180) back to settings recorded earlier in Section 5.

5.2.20 Tighten both stop screw nuts (1-190) securely.

5.3 Pneumatic Power Module Removal

⚠ CAUTION

Due to the weight and size of spring module, heavy duty support equipment will be required when installing spring cartridge module to the actuator housing. For the approximate weight of the spring cartridge refer to Section 6.

5.3.1 Standard Outer end cap with pipe plug use step 5.3.1.1, outer end cap with extended stop (ES) use step 5.3.1.2, G2 or G3 outer end cap with M3 or M3HW use step 5.3.1.3 and G01 outer end cap with M3 or M3HW use step 5.3.1.4.

5.3.1.1 Standard outer end cap - Remove pipe plug (3-120) from outer end cap (3-80).

5.3.1.2 ES outer end cap:

5.3.1.2.1 Loosen ES nut (3-190).

5.3.1.2.2 Unscrew ES (3-180) and remove from outer end cap (3-80).

5.3.1.3 G2 or G3 M3/M3HW outer end cap:

5.3.1.3.1 Remove socket cap screws (3-320) from M3 adapter (3-280).

5.3.1.3.2 Remove M3 adapter (3-280) from outer end cap (3-80).

5.3.1.4 G01M3/M3HW outer end cap:

5.3.1.4.1 Remove socket cap screw (3-130) from M3 keeper (3-360).

5.3.1.4.2 Remove M3 keeper (3-360) from M3 adapter (3-360) and outer end cap (3-80).

5.3.1.4.3 Remove M3 jackscrew (3-290) with M3 adapter (3-360) from outer end cap (3-80).

5.3.2 Using a male square drive extension, go through outer end cap (3-80) and unscrew piston rod (3-40) from the drive module.

5.3.3 Remove hex cap screws (3-100) with lockwashers (3-110) from housing (1-10).

NOTE:

When removing power module from housing (1-10) be careful not to lose O-ring seal (4-90).

5.3.4 Remove power module from actuator housing (1-10).

5.4 Pneumatic Power Module Installation

5.4.1 Check to verify that O-ring seal (4-90) is properly seated in its seal groove located on the housing side of inner end cap (3-10).

NOTE:
G2 and G3 models (older models) confirm that the two inboard hex nuts (3-90) flats are aligned to fit into the slot located in the end of housing (1-10).

5.4.2 Using lifting equipment move the power module up to the drive module and align piston rod (3-40) as follows:

5.4.2.1 G2 through G13 models align piston rod (3-40) with power module extension rod assembly (1-50).

5.4.2.2 G01 models align piston rod (3-40) with the drive module guide block (1-30).

5.4.3 Using a male square drive extension, go through outer end cap (3-80) and install piston rod (3-40) as follows:

⚠ WARNING

After initial thread engagement the tension rod must be rotated clockwise the minimum number of turns listed in the following table.

Table 11. Piston Rod/Tension Rod Number of Turns Table

ACTUATOR MODEL G/GC/GH/GHC	MINIMUM NO TURNS
1	6
2	10
3	10
4	10
5	13
7	14
8	20
10	25
G13	31

5.4.3.1 G2 through G13 screw piston rod (3-40) onto extension rod assembly (1-50). GH/GHC2 through GH/GHC10, screw Piston Rod (3-40) directly into Guide Block (1-30).

5.4.3.2 G01 only screw piston rod (3-40) onto guide block (1-30).

⚠ CAUTION

When screwing piston rod into the G2 through G13 extension rod assembly (1-50) and G/GC/GH/GHC piston rod into guide block (1-30) or G01 guide block (1-30) make certain that the piston rod and extension rod assembly/guide block threads do not cross-thread.

5.4.4 Torque tighten piston rod (3-40). Refer to Section 3 step 3.3.2 for correct torque value.

Table 12. Spring Cartridge Tension Rod Torque Table

HOUSING MODEL G/GC/GH/GHC	TORQUE (±5 % Percent)		HOUSING MODEL G/GC/GH/GHC	TORQUE (±5 % Percent)	
	lbf-ft.	Nm		lbf-ft.	Nm
G01	90	122	7	240	325
2	90	122	8	240	325
3	90	122	10	240	325
4	240	325	G13	240	325
5	240	325			

5.4.5 Install lock washers (3-110) onto hex cap screws (3-100).

5.4.6 Install hex cap screws (3-100) with lockwashers (3-110) through housing (1-10) and screw into inner end cap (3-10).

5.4.7 Standard Outer end cap with pipe plug use step 5.4.7.1, outer end cap with extended stop (ES) use step 5.4.7.2, G2 or G3 outer end cap with M3 or M3HW use step 5.4.7.3 and G01 outer end cap with M3 or M3HW use step 5.4.7.4.

5.4.7.1 Standard outer end cap - Using pipe dope, install pipe plug (3-120) into outer end cap (3-80).

5.4.7.2 ES outer end cap:

5.4.7.2.1 Screw ES (3-180) into outer end cap (3-80).

5.4.7.2.2 Install ES nut (3-190) on to ES (3-180).

5.4.7.3 G2 or G3 M3/M3HW outer end cap:

5.4.7.3.1 Install M3 adapter (3-280) into outer end cap (3-80).

5.4.7.3.2 Install socket cap screws (3-320) through M3 adapter (3-280) and into outer end cap (3-80).

5.4.7.4 G01M3/M3HW outer end cap:

5.4.7.4.1 Remove socket cap screw (3-130) from M3 keeper (3-360).

5.4.7.4.2 Remove M3 keeper (3-360) from M3 adapter (3-360) and outer end cap (3-80).

5.4.7.4.3 Remove M3 jackscrew (3-290) with M3 adapter (3-360) from outer end cap (3-80).

5.5 G2 Thru G13 Powr Swivl Removal (Excludes GH/GHC Model Actuators)

⚠ CAUTION

While step 5.5.1 is in progress be sure to maintain guide bar retention when moving the guide block.

5.5.1 Push the guide block to the side of housing (1-10) that will expose the extension rod assembly (1-50).

NOTE:

The guide block can be moved by inserting a long non metallic rod through the hole where the blind end cap was removed and pushing on the guide block.

5.5.2 Refer to Assembly Drawing page 2 of 2 Detail "B". Use Bettis tool part number as listed in chart in Section 1 step 1.2.1 to remove retainer nut assembly (1-60) from the guide block (1-30).

⚠ CAUTION

When removing rod extension assembly from guide block be careful not to drop one of the spherical washers inside the housing.

5.5.3 Remove rod extension assembly (1-50) from guide block (1-30).

NOTE:

One spherical washer (1-40) will be removed from guide block (1-30) when extension rod assembly is removed.

5.5.4 Remove the remaining spherical washer (1-40) from guide block (1-30).

5.6 G2 Thru G13 Powr Swivl Module Installation (Excludes GH/GHC Model Actuators)

⚠ WARNING

The actuator must be in the appropriate over-travel position. Confirm over-travel position by observing the guide block (1-30) is against the inner wall of housing (1-10).

⚠ CAUTION

While step 5.6.1 is in progress be sure to maintain guide bar retention when moving the guide block.

5.6.1 Push the guide block to the required side of the housing (1-10).

NOTE:
The guide block can be moved by inserting a long rod through either end of the housing and pushing on the guide block.

5.6.2 Lubricate two spherical washers (1-40), and one extension rod assembly (1-50).

5.6.3 Install one spherical washer (1-40) into the side of guide block (1-30).

NOTE:
The spherical side of washer (1-40) will be facing to the outside of guide block (1-30).

5.6.4 Install second spherical washer (1-40) over threaded end of extension rod assembly (1-50).

NOTE:
The spherical side of the washer will go on the extension rod assembly facing the head of the extension rod assembly.

5.6.5 Install extension rod assembly (1-50) into right of guide block (1-30) and up against the first spherical washer (1-40).

5.6.6 Install extension retainer nut assembly (1-60) over extension rod assembly (1-50) and screw into guide block (1-30).

5.6.7 Tighten extension retainer nut assembly (1-60) until extension rod assembly (1-50) cannot move. Back off the extension retainer nut assembly (1-60) just enough to allow for extension rod assembly (1-50) to move freely.

Section 6: Actuator Support Information

6.1 G/GC/GH/GHC Module Weights by Item Number and Actuator Housing Size

Table 13. G/GC/GH/GHC Module Weights by Item Number and Actuator Housing Size

ITEM NO.		G01 WT.	2 WT.	3 WT.	4 WT.	5 WT.	7 WT.	8 WT.	10 WT.	G13 WT.	MODULE DESCRIPTION
1	lb	83	110	162	280	545	1025	1495	2550	4625	Drive Module
	Kg	38	50	73	127	247	465	678	1157	2098	
3	lb	69	N/A	N/A	N/A	N/A	N/A	N/A	N/A	N/A	8” Dia. Power Module
	Kg	31	N/A	N/A	N/A	N/A	N/A	N/A	N/A	N/A	
3	lb	68	80	N/A	N/A	N/A	N/A	N/A	N/A	N/A	9” Dia. Power Module
	Kg	30.5	36	N/A	N/A	N/A	N/A	N/A	N/A	N/A	
3	lb	75	73.5	88	N/A	N/A	N/A	N/A	N/A	N/A	10” Dia. Power Module
	Kg	34	33	40	N/A	N/A	N/A	N/A	N/A	N/A	
3	lb	86	86	104	130	N/A	N/A	N/A	N/A	N/A	12” Dia. Power Module
	Kg	39	39	47	59	N/A	N/A	N/A	N/A	N/A	
3	lb	96	96	114	145	N/A	N/A	N/A	N/A	N/A	14” Dia. Power Module
	Kg	44	44	51	66	N/A	N/A	N/A	N/A	N/A	
3	lb	N/A	135	145	168	295	N/A	N/A	N/A	N/A	16” Dia. Power Module
	Kg	N/A	61	66	76	134	N/A	N/A	N/A	N/A	
3	lb	N/A	N/A	235	260	305	585	N/A	N/A	N/A	20” Dia. Power Module
	Kg	N/A	N/A	107	118	138	265	N/A	N/A	N/A	
3	lb	N/A	N/A	N/A	340	410	735	911	N/A	N/A	24” Dia. Power Module
	Kg	N/A	N/A	N/A	154	186	334	413	N/A	N/A	
3	lb	N/A	N/A	N/A	505	590	810	1225	1120	N/A	28” Dia. Power Module
	Kg	N/A	N/A	N/A	229	268	367	556	508	N/A	
3	lb	N/A	N/A	N/A	N/A	977	1100	1260	1440	N/A	32” Dia. Power Module
	Kg	N/A	N/A	N/A	N/A	443	499	572	653	N/A	
3	lb	N/A	N/A	N/A	N/A	1243	1400	1525	1755	N/A	36” Dia. Power Module
	Kg	N/A	N/A	N/A	N/A	564	653	692	796	N/A	
3	lb	N/A	N/A	N/A	N/A	N/A	N/A	1975	2205	-	40” Dia. Power Module
	Kg	N/A	N/A	N/A	N/A	N/A	N/A	896	1000	-	
3	lb	N/A	N/A	N/A	N/A	N/A	N/A	N/A	N/A	3120	44” Dia. Power Module
	Kg	N/A	N/A	N/A	N/A	N/A	N/A	N/A	N/A	1415	
3	lb	N/A	N/A	N/A	N/A	N/A	N/A	N/A	N/A	-	48” Dia. Power Module
	Kg	N/A	N/A	N/A	N/A	N/A	N/A	N/A	N/A	-	
3	lb	N/A	N/A	N/A	N/A	N/A	N/A	N/A	N/A	4130	52” Dia. Power Module
	Kg	N/A	N/A	N/A	N/A	N/A	N/A	N/A	N/A	1873	
5	lb	160	225	320	564	975	2740	3545	4975	10010	SR1 Spring Module
	Kg	73	102	145	256	442	1243	1608	2257	4541	
5	lb	158	215	310	549	980	2630	2345	4515	9275	SR2 Spring Module
	Kg	72	98	141	249	445	1193	1064	2048	4207	

ITEM NO.		G01 WT.	2 WT.	3 WT.	4 WT.	5 WT.	7 WT.	8 WT.	10 WT.	G13 WT.	MODULE DESCRIPTION
5	lb	153	215	295	534	925	2410	3085	4095	8060	SR3 Spring Module
	Kg	153	98	295	534	925	2410	3085	4095	8060	
5	lb	144	200	280	474	860	2210	N/A	3735	7325	SR4 Spring Module
	Kg	65	91	127	215	390	1002	N/A	1694	3323	
5	lb	N/A	200	N/A	N/A	N/A	N/A	N/A	N/A	N/A	SRA5 Spring Module
	Kg	N/A	91	N/A	N/A	N/A	N/A	N/A	N/A	N/A	
5	lb	N/A	180	N/A	N/A	N/A	N/A	N/A	N/A	N/A	SRA6 Spring Module
	Kg	N/A	82	N/A	N/A	N/A	N/A	N/A	N/A	N/A	
5	lb	N/A	220	310	N/A	N/A	N/A	N/A	N/A	N/A	SRF1 Spring Module
	Kg	N/A	100	141	N/A	N/A	N/A	N/A	N/A	N/A	
5	lb	N/A	210	300	N/A	N/A	N/A	N/A	N/A	N/A	SRF2 Spring Module
	Kg	N/A	95	136	N/A	N/A	N/A	N/A	N/A	N/A	
5	lb	N/A	210	285	N/A	N/A	N/A	N/A	N/A	N/A	SRF3 Spring Module
	Kg	N/A	95	129	N/A	N/A	N/A	N/A	N/A	N/A	
5	lb	N/A	195	270	N/A	N/A	N/A	N/A	N/A	N/A	SRF4 Spring Module
	Kg	N/A	88	122	N/A	N/A	N/A	N/A	N/A	N/A	
5	lb	N/A	205	N/A	N/A	N/A	N/A	N/A	N/A	N/A	SRF5 Spring Module
	Kg	N/A	93	N/A	N/A	N/A	N/A	N/A	N/A	N/A	
5	lb	N/A	185	N/A	N/A	N/A	N/A	N/A	N/A	N/A	SRF6 Spring Module
	Kg	N/A	84	N/A	N/A	N/A	N/A	N/A	N/A	N/A	

6.2 G01 Tool Style and Wrench Size

Table 14. G01 Tool Style and Wrench Size

ITEM NO.	WRENCH SIZE	ITEM QTY	LOCATION OR DESCRIPTION	RECOMMENDED TOOL STYLE
1-110	9/16"	4	Hex Cap Screws	Socket
1-160	1/2"	4	Hex Cap Screws	Socket
1-180	3/8” Sq.	2	Stop Screws	Open End or Adjustable
1-190	1-15/16”	2	Hex Jam Nuts	Open End or Adjustable
3-20	3/8”	2	Tie Bar (flats)	Open End or Adjustable
3-40	3/8” Sq.	1	Piston Rod	Male Drive Extension
3-90	1-1/8”	2	Standard Hex Nuts	Socket
3-100	9/16”	4	Hex Cap Screws	Socket
3-120	5/8” Sq.	1	Pipe Plug	Open End or Adjustable
3-130	3/16”	2	Socket Cap Screws	Allen
5-20	9/16”	4	Hex Cap Screws	Socket
7-20	9/16”	4	Hex Cap Screws	Socket
12	1”	1	Breather Assembly	Socket
13	3/4”	2	Vent Check Assembly	Open End
-	3/8” Sq.	1	Tension rod	Male Drive Extension

6.3 G/GC2 Tool Style and Wrench Size

Table 15. G/GC2 Tool Style and Wrench Size

ITEM NO.	WRENCH SIZE	ITEM QTY	LOCATION OR DESCRIPTION	RECOMMENDED TOOL STYLE
1-110	9/16”	6	Hex Cap Screws	Socket
1-160	9/16”	4	Hex Cap Screws	Socket
1-180	3/8” Sq.	2	Stop Screws	Open End or Adjustable
1-190	1-1/8”	2	Hex Jam Nuts	Open End or Adjustable
3-20	3/8”	2	Tie Bar (flats)	Open End or Adjustable
3-40	3/8” Sq.	1	Piston Rod	Male Drive Extension
3-90	1-1/8”	2	Standard Hex Nuts	Socket
3-100	9/16”	4	Hex Cap Screws	Socket
3-120	5/8” Sq.	1	Pipe Plug	Open End or Adjustable
3-130	3/16”	2	Socket Cap Screws	Allen
5-20	9/16”	6	Hex Cap Screws	Socket
7-20	9/16”	4	Hex Cap Screws	Socket
12	1”	1	Breather Assembly	Socket
13	3/4”	2	Vent Check Assembly	Open End
-	3/8” Sq.	1	Tension rod	Male Drive Extension

6.4 G/GC3 Tool Style and Wrench Size GH2/GHC2 for Item No 3-20 to 3-130

Table 16. G/GC3 Tool Style and Wrench Size, GH2/GHC2 for Item No 3-20 to 3-130

ITEM NO.	WRENCH SIZE	ITEM QTY	LOCATION OR DESCRIPTION	RECOMMENDED TOOL STYLE
1-110	9/16"	8	Hex Cap Screws	Socket
1-160	9/16"	4	Hex Cap Screws	Socket
1-180	1/2” Sq.	2	Stop Screws	Open End or Adjustable
1-190	1-5/16”	2	Hex Jam Nuts	Open End or Adjustable
3-20	1/2”	2	Tie Bar (flats)	Open End or Adjustable
3-40	3/8” Sq.	1	Piston Rod	Male Drive Extension
3-90	1-5/16”	4	Standard Hex Nuts	Socket
3-100	9/16”	6	Hex Cap Screws	Socket
3-120	5/8” Sq.	1	Pipe Plug	Open End or Adjustable
3-130	3/16”	2	Socket Cap Screws	Allen
5-20	9/16”	6	Hex Cap Screws	Socket
7-20	9/16”	4	Hex Cap Screws	Socket
12	1”	1	Breather Assembly	Socket
13	3/4”	2	Vent Check Assembly	Open End
-	3/8” Sq.	1	Tension rod	Male Drive Extension

6.5 G/GC4 Tool Style and Wrench Size GH3/GHC3 for Item No 3-20 to 3-130

Table 17. G/GC4 Tool Style and Wrench Size GH3/GHC3 for Item No 3-20 to 3-130

ITEM NO.	WRENCH SIZE	ITEM QTY	LOCATION OR DESCRIPTION	RECOMMENDED TOOL STYLE
1-110	9/16”	8	Hex Cap Screws	Socket
1-160	9/16”	4	Hex Cap Screws	Socket
1-180	3/4” Sq.	2	Stop Screws	Open End or Adjustable
1-190	1-13/16”	2	Hex Jam Nuts	Open End or Adjustable
3-20	5/8”	2	Tie Bar (flats)	Open End or Adjustable
3-40	1/2” Sq.	1	Piston Rod	Male Drive Extension
3-90	1-5/8”	2	Standard Hex Nuts	Socket
3-100	3/4"	6	Hex Cap Screws	Socket
3-120	5/8” Sq.	1	Pipe Plug	Open End or Adjustable
3-130	3/16”	2	Socket Cap Screws	Allen
5-20	3/4"	6	Hex Cap Screws	Socket
7-20	9/16”	4	Hex Cap Screws	Socket
12	1”	1	Breather Assembly	Socket
13	3/4"	2	Vent Check Assembly	Open End
-	3/4”	1	Tension rod	Male Drive Extension

6.6 G/GC5 Tool Style and Wrench Size GH4/GHC4 for Item No 3-20 to 3-130

Table 18. G/GC5 Tool Style and Wrench Size GH4/GHC4 for Item No 3-20 to 3-130

ITEM NO.	WRENCH SIZE	ITEM QTY	LOCATION OR DESCRIPTION	RECOMMENDED TOOL STYLE
1-110	3/4”	8	Hex Cap Screws	Socket
1-120	3/4”	4	Hex Cap Screws	Socket
1-160	9/16”	6	Hex Cap Screws	Socket
1-180	7/8" Sq.	2	Stop Screws	Open End or Adjustable
1-190	2-3/8”	2	Heavy Hex Jam Nuts	Open End or Adjustable
3-20	1/2” Sq.	2	Tie Bar (flats)	Open End or Adjustable
3-40	1/2” Sq.	1	Piston Rod	Male Drive Extension
3-90	2”	2	Standard Hex Nuts	Socket
3-100	3/4”	8	Hex Cap Screws	Socket
3-120	1-1/8” Sq.	1	Pipe Plug	Open End or Adjustable
3-130	3/16”	2	Socket Cap Screws	Allen
5-20	3/4”	8	Hex Cap Screws	Socket
7-20	9/16”	4	Hex Cap Screws	Socket
12	1”	1	Breather Assembly	Socket
13	3/4”	2	Vent Check Assembly	Open End
-	3/4”	1	Tension rod	Male Drive Extension

6.7 G/GC7 Tool Style and Wrench Size GH5/GHC5 for Item No 3-20 to 3-130

Table 19. G/GC7 Tool Style and Wrench Size GH5/GHC5 for Item No 3-20 to 3-130

ITEM NO.	WRENCH SIZE	ITEM QTY	LOCATION OR DESCRIPTION	RECOMMENDED TOOL STYLE
1-110	3/4”	8	Hex Cap Screws	Socket
1-120	3/4”	4	Hex Cap Screws	Socket
1-160	9/16”	8	Hex Cap Screws	Socket
1-180	1”	2	Stop Screws	Open End or Adjustable
3-20	3/4” Sq.	2	Tie Bar (female square)	Male Drive Extension
3-40	3/4” Sq.	1	Piston Rod	Male Drive Extension
3-90	2-3/8"	2	Standard Hex Nuts	Socket
3-100	15/16"	8	Hex Cap Screws	Socket
3-120	1-1/8" Sq.	1	Pipe Plug	Open End or Adjustable
3-130	3/16”	2	Socket Cap Screws	Allen
5-20	15/16”	8	Hex Cap Screws	Socket
7-20	9/16”	8	Hex Cap Screws	Socket
12	1"	1	Breather Assembly	Socket
13	3/4”	2	Vent Check Assembly	Open End
-	3/4”	1	Tension rod	Male Drive Extension

6.8 G/GC8 Tool Style and Wrench Size GH7/GHC7 for Item No 3-20 to 3-130

Table 20. G/GC8 Tool Style and Wrench Size GH7/GHC7 for Item No 3-20 to 3-130

ITEM NO.	WRENCH SIZE	ITEM QTY	LOCATION OR DESCRIPTION	RECOMMENDED TOOL STYLE
1-110	3/4”	12	Hex Cap Screws	Socket
1-120	3/4”	4	Hex Cap Screws	Socket
1-160	9/16”	8	Hex Cap Screws	Socket
1-180	1-1/4”	2	Stop Screws	Open End or Adjustable
3-20	3/4” Sq.	2	Tie Bar (female square)	Male Drive Extension
3-40	3/4” Sq.	1	Piston Rod	Male Drive Extension
3-90	2-3/4”	2	Heavy Hex Nuts	Socket
3-100	1-1/8”	8	Hex Cap Screws	Socket
3-120	1-5/16” Sq.	1	Pipe Plug	Open End or Adjustable
3-130	3/16”	2	Socket Cap Screws	Allen
5-20	1-1/8”	8	Hex Cap Screws	Socket
7-20	1-1/8”	8	Hex Cap Screws	Socket
12	1”	1	Breather Assembly	Socket
13	3/4”	2	Vent Check Assembly	Open End
-	3/4”	1	Tension rod	Male Drive Extension

6.9 G/GC10 Tool Style and Wrench Size GH8/GHC8 for Item No 3-20 to 3-130

Table 21. G/GC10 Tool Style and Wrench Size GH8/GHC8 for Item No 3-20 to 3-130

ITEM NO.	WRENCH SIZE	ITEM QTY	LOCATION OR DESCRIPTION	RECOMMENDED TOOL STYLE
1-110	1-1/8”	20	Hex Cap Screws	Socket
1-120	1-1/8”	4	Hex Cap Screws	Socket
1-160	9/16”	12	Hex Cap Screws	Socket
1-180	2" Sq.	2	Stop Screws	Open End or Adjustable
3-20	3/4” Sq.	2	Tie Bar (female square)	Male Drive Extension
3-40	3/4” Sq.	1	Piston Rod	Male Drive Extension
3-90	4-1/4”	2	Heavy Hex Nuts	Socket
3-100	1-11/16”	8	Hex Cap Screws	Socket
3-120	1-7/8” Sq.	1	Pipe Plug	Open End or Adjustable
3-130	3/16”	2	Socket Cap Screws	Allen
5-20	1-13/16”	8	Hex Cap Screws	Socket
7-20	1-1/8”	8	Hex Cap Screws	Socket
12	1”	1	Breather Assembly	Socket
13	3/4”	2	Vent Check Assembly	Open End
-	3/4”	1	Tension rod	Male Drive Extension

6.10 G13 Tool Style and Wrench Size GH10/GHC10 for Item No 3-20 to 3-130

Table 22. G13 Tool Style and Wrench Size GH10/GHC10 for Item No 3-20 to 3-130

ITEM NO.	WRENCH SIZE	ITEM QTY	LOCATION OR DESCRIPTION	RECOMMENDED TOOL STYLE
1-110	3/4”	16	Hex Cap Screws	Socket
1-120	3/4”	4	Hex Cap Screws	Socket
1-160	9/16”	8	Hex Cap Screws	Socket
1-180	1-1/2”	2	Stop Screws	Open End or Adjustable
3-20	3/4” Sq.	2	Tie Bar (female square)	Male Drive Extension
3-40	3/4” Sq.	1	Piston Rod	Male Drive Extension
3-90	3-1/2”	2	Heavy Hex Nuts	Socket
3-100	1-5/16”	8	Hex Cap Screws	Socket
3-120	1-5/16” Sq.	1	Pipe Plug	Open End or Adjustable
3-130	3/16”	2	Socket Cap Screws	Allen
5-20	1-1/8”	8	Hex Cap Screws	Socket
7-20	1-5/16”	8	Hex Cap Screws	Socket
12	1”	1	Breather Assembly	Socket
13	3/4”	2	Vent Check Assembly	Open End
-	3/4”	1	Tension rod	Male Drive Extension

Section 7: Troubleshooting

7.1 Fault Insertion

In the unlikely event of a fault developing, the following Fault Location Table is provided to assist the service engineer to perform troubleshooting. This table is designed to cover as wide a range of Emerson Bettis actuators as possible. Reference to equipment not supplied should be ignored.

Table 23. Fault Location Table

SYMPTOM	POTENTIAL CAUSES	REMEDY
Erratic movement	Irregular supply of operating medium	Check operating medium for consistent supply pressure and correct as necessary
	Inadequate lubrication	Dismantle, relubricate and reassemble
	Worn parts	Dismantle. Visually inspect for significant wear. Actuator replacement may be required
	Defective valve	Consult the valve OEM's documentation
Short stroke	Incorrectly set stops (valve and /or actuator)	Check the position of the travel stops and readjust as necessary
	Hardened grease	Dismantle, remove any hard grease, Relubricate and reassemble
	Debris left in the cylinder or housing during maintenance	Disassemble cylinder assembly to remove debris. Reassemble cylinder assemble as necessary
	Defective valve	Consult the valve manufacturer's documentation
Apparent lack of torque	Inadequate supply pressure	Ensure supply pressure is above the minimum operating pressure of the actuator and that output torque produced at supply pressure exceeds valve torque demand
	Incorrect speed control settings	Adjust speed controls to increase flow
	Exhaust port blocked	Remove and clean the exhaust port silencers and replace
	Pipe work blocked, crushed or leaking	Examine the pipe work for blockages, crushed pipe or leakage. Clear or replace as necessary
	Defective controls	Examine the controls, refurbish or renew as necessary. Refer to component manufacturer's documentation
	Defective piston seal	Dismantle the cylinder assembly, remove the defective piston seal. Fit new seal and reassemble
	Defective rod seal	Dismantle the cylinder assembly, remove the defective rod seal. Fit new seal and reassemble
	Defective housing seal	Dismantle the housing assembly, remove the defective seal. Fit new seal and reassemble
	High valve torque or valve seized	Consult the valve OEM documentation

7.2 Operational Test

7.2.1 Full Stroke Test
The "Full Stroke Test" ("On-line") must be performed to satisfy the PFD_{AVG} (average probability of failure on demand) value. The full stroke test frequencies will be defined by the final installer to achieve the defined SIL level.

7.2.1.1 Procedure

7.2.1.1.1 Stroke the actuator/valve assembly two complete open/close cycles with complete closing of the valve.

7.2.1.1.2 Verify the open/close cycles functioned correctly (e.g. check locally, or automatically via Logic solver, the correct movement of the actuator/valve).

Upon successful completion of the above described Full Stroke Test procedure, the "Test Coverage" can be considered 99%.

7.2.2 Partial Stroke Test (when requested)
The "Partial Stroke Test" ("On-line") can be performed to improve the PFD_{AVG} value and to satisfy PFD_{AVG} (average probability of failure on demand) value.
A typical partial stroke value is 15% of the stroke and the recommended test interval is about every one to three months.

7.2.2.1 Procedure

7.2.2.1.1 Operate the actuator/valve assembly for No° 1 open/close cycles 15% of the stroke.

7.2.2.1.2 Verify the partial stroke test functioned correctly (e.g. check locally, or automatically via logic solver, or via the PST system the correct movement of the actuator/valve was 15% of the stroke).

NOTE:
The above test is only applicable on systems equipped with a partial stroke feature.

Section 8: Removal and Decommissioning

8.1 Removal and Decommissioning

⚠ WARNING

Always follow safe work practices remove and disassemble G-Series actuator.

The below basic procedure should not supersede or replace any customer's plant safety or work procedures. If a conflict arises between this procedure and the customer's procedures, the differences should be resolved in writing between an authorized customer's representative and an authorized Emerson/Bettis representative.

⚠ CAUTION

Make sure actuator is isolated before removing from valve. Turn OFF the power medium and bleed off all pressure first, including storage tank (if present). Next, bleed off pilot pressure, disconnect: pneumatic pressure supply, pilot tubing and electrical wiring (if equipped).

Before starting the disassembly, a large area should be created around the actuator so to allow any kind of movement.

Separate the parts composing the actuator according to their nature (ex. metallic, and plastic materials, fluids etc.) and send them to differentiated waste collection sites, as provided for by the laws and provisions in force.

8.1.1 Drain tanks and remove tubing from actuator. Remove accessories (if equipped) and controls from actuator.

8.1.2 Remove all equipment mounted on top of actuator (limit switches, end of stroke valve, and relevant pneumatic/electric connection, etc.)

8.1.3 Remove mounting bolts and actuator is ready to be removed from valve. For complete actuator tear down refer to Section 2 of the manual.

Section 9: Document Revision

Table 24. Revision Overview

ECN	DATE	REV		BY *	DATE
Released	Sept.1998	A		B. Cornelius	Sept.1998
17787	Dec. 2001	B	UPDATED	C. Ross	Dec. 2001
18190	Aug. 2003	C	UPDATED	B. Jumawan	Aug. 2003
VAWCO252	Dec. 2009	D	UPDATED	D. Blahnik	Dec. 2009
VAWCO1779	Nov. 2012	E	UPDATED	C. Rico	Nov. 2012
VAWCO2746	June 2015	F	UPDATED	C. Rico	June 2015
SY736	June 2021	H	UPDATED	M. Christopherson	June 2021

* Signatures on file Bettis, Houston, Texas

Appendix A: List of Tables

Table 1 Rod Extension Retainer Nut Tool Part Number 4
Table 2 Housing Cover Screw Quantity and Torque Table 21
Table 3 Piston Rod Number of Turns Table 23
Table 4 Piston Rod Required Torque Table 24
Table 5 Tie Bar Nuts Required Torque Table 27
Table 6 Early G2 and G3 Tie Bar Nuts Required Torque Table 31
Table 7 Early G2 and G3 Tension Rod Number of Turns 43
Table 8 Spring Cartridge Tension Rod Torque Table 44
Table 9 Hex Cap Screws (7-20) Torque Table 45
Table 10 Wire Length Requirements 45
Table 11 Piston Rod/Tension Rod Number of Turns Table 48
Table 12 Spring Cartridge Tension Rod Torque Table 49
Table 13 G/GC/GH/GHC Module Weights By Item Number And Actuator Housing Size 52
Table 14 G01 Tool Style and Wrench Size 53
Table 15 G/GC2 Tool Style and Wrench Size 54
Table 16 G/GC3 Tool Style and Wrench Size GH2/GHC2 For Item No 3-20 to 3-130 54
Table 17 G/GC4 Tool Style and Wrench Size GH3/GHC3 For Item No 3-20 to 3-130 55
Table 18 G/GC5 Tool Style and Wrench Size GH4/GHC4 For Item No 3-20 to 3-130 55
Table 19 G/GC7 Tool Style and Wrench Size GH5/GHC5 For Item No 3-20 to 3-130 56
Table 20 G/GC8 Tool Style and Wrench Size GH7/GHC7 For Item No 3-20 to 3-130 56
Table 21 G/GC10 Tool Style and Wrench Size GH8/GHC8 For Item No 3-20 to 3-130 57
Table 22 G13 Tool Style and Wrench Size GH10/GHC10 For Item No 3-20 to 3-130 57
Table 23 Fault Location Table 58
Table 24 Revision Overview 61

Appendix A: List of Drawings

A.1 Part No. 116422, GXXXX Pneumatic Assembly Drawing, Sheet 1 of 2

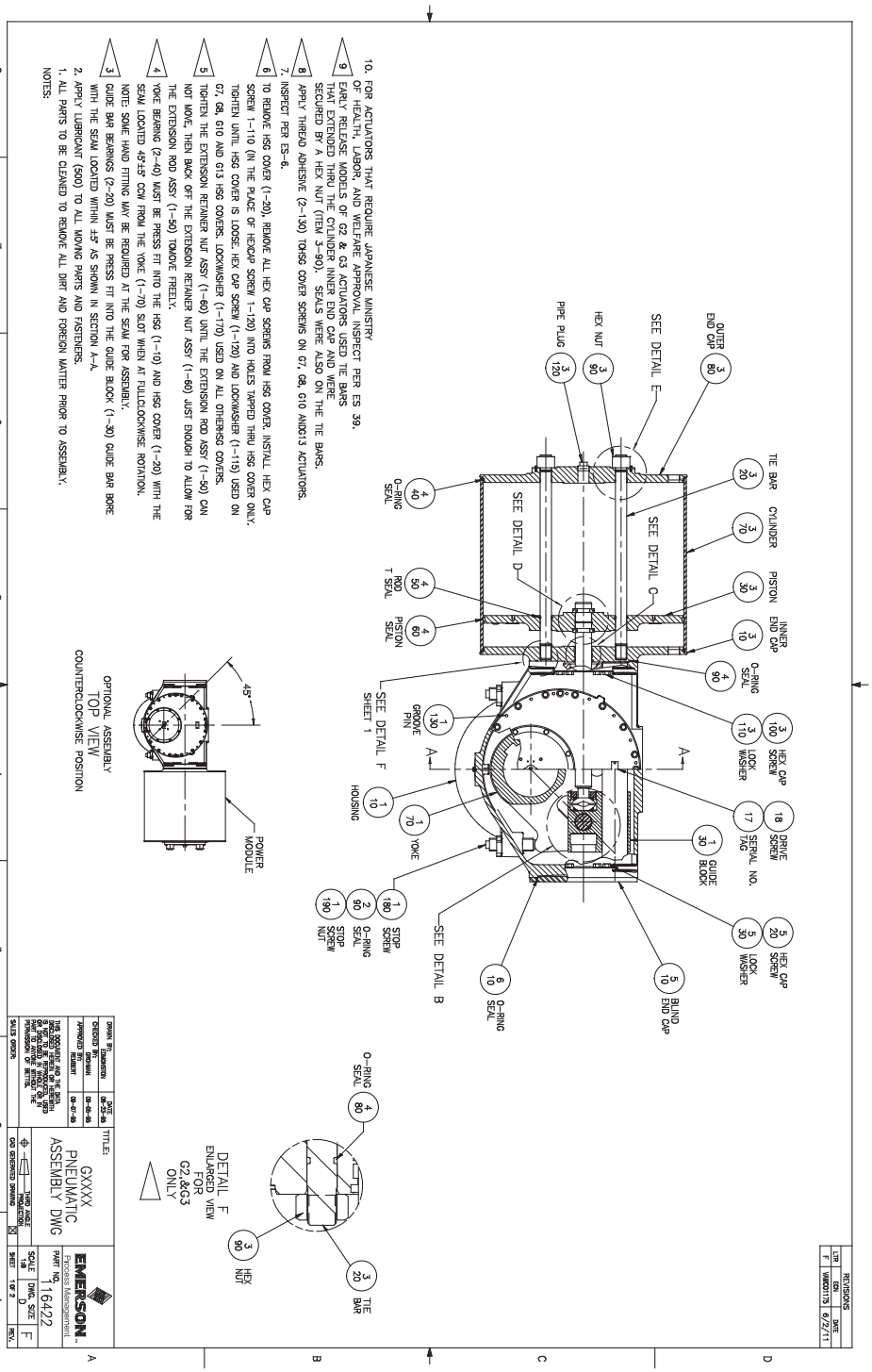

A.2 Part No. 116422, GXXXX Pneumatic Assembly Drawing, Sheet 2 of 2

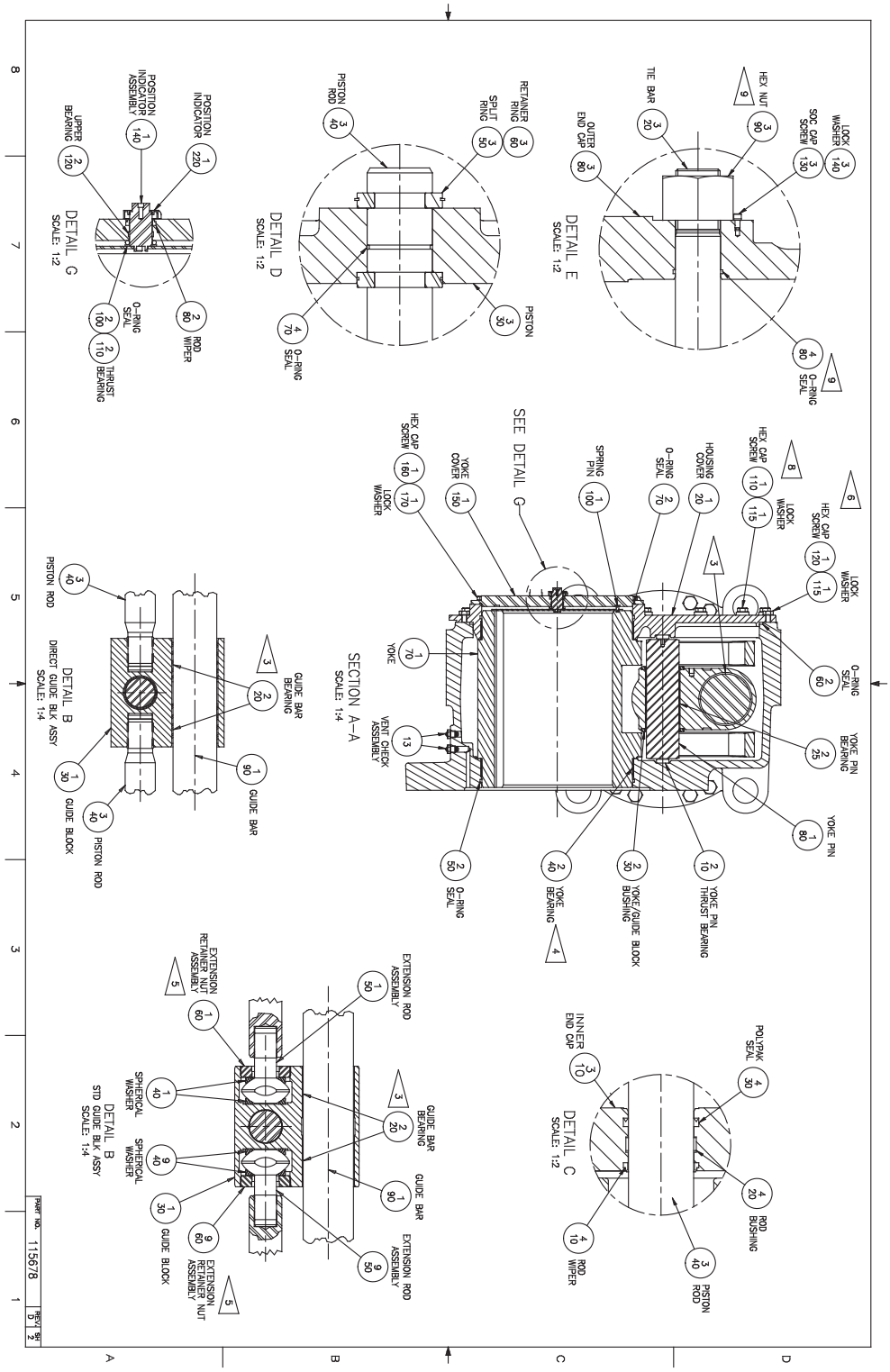

A.3 Part No. 115678, GXX2XX Pneumatic Assembly Drawing, Sheet 1 of 2

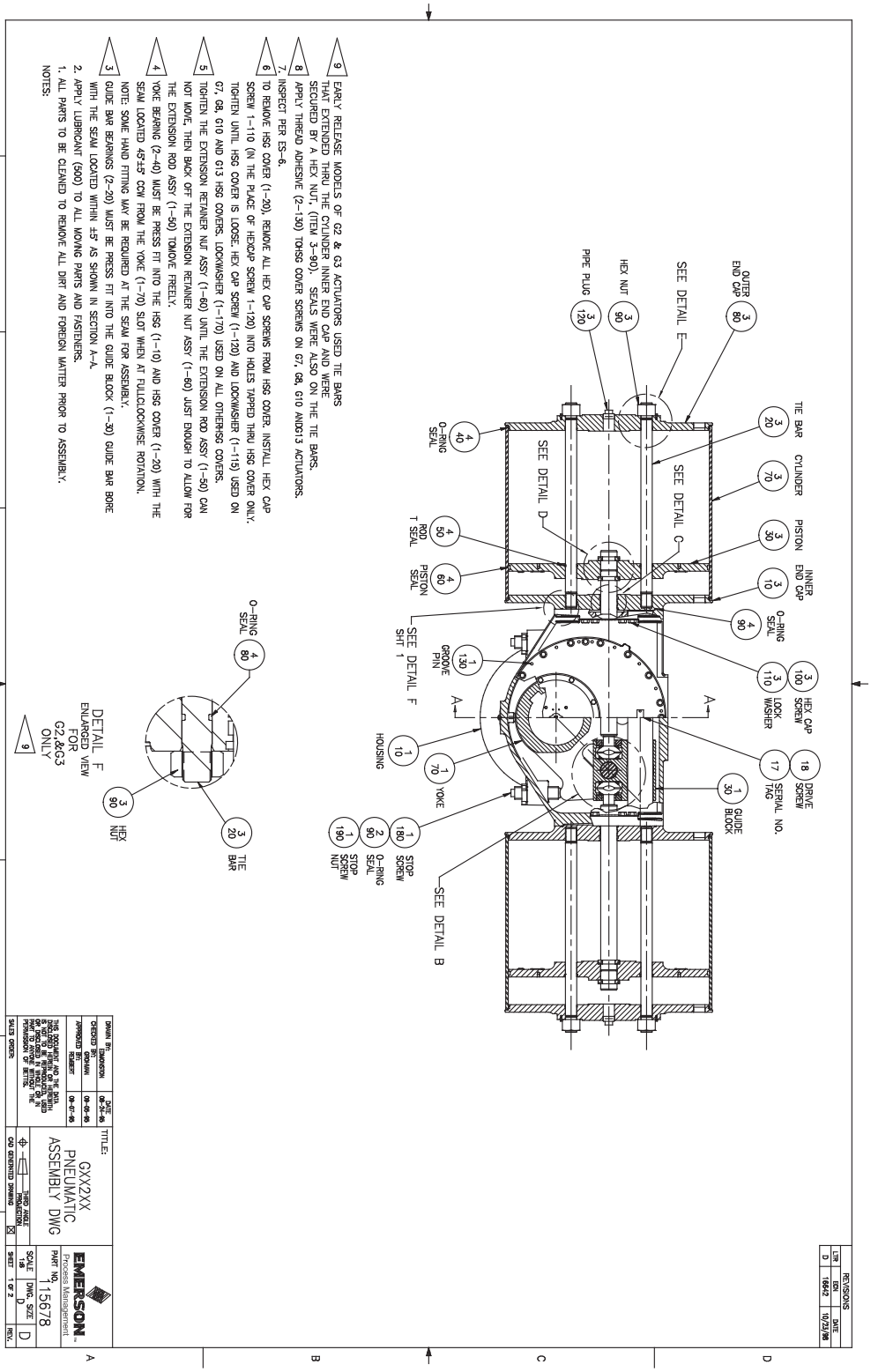

A.4 Part No. 115678, GXX2XX Pneumatic Assembly Drawing, Sheet 2 of 2

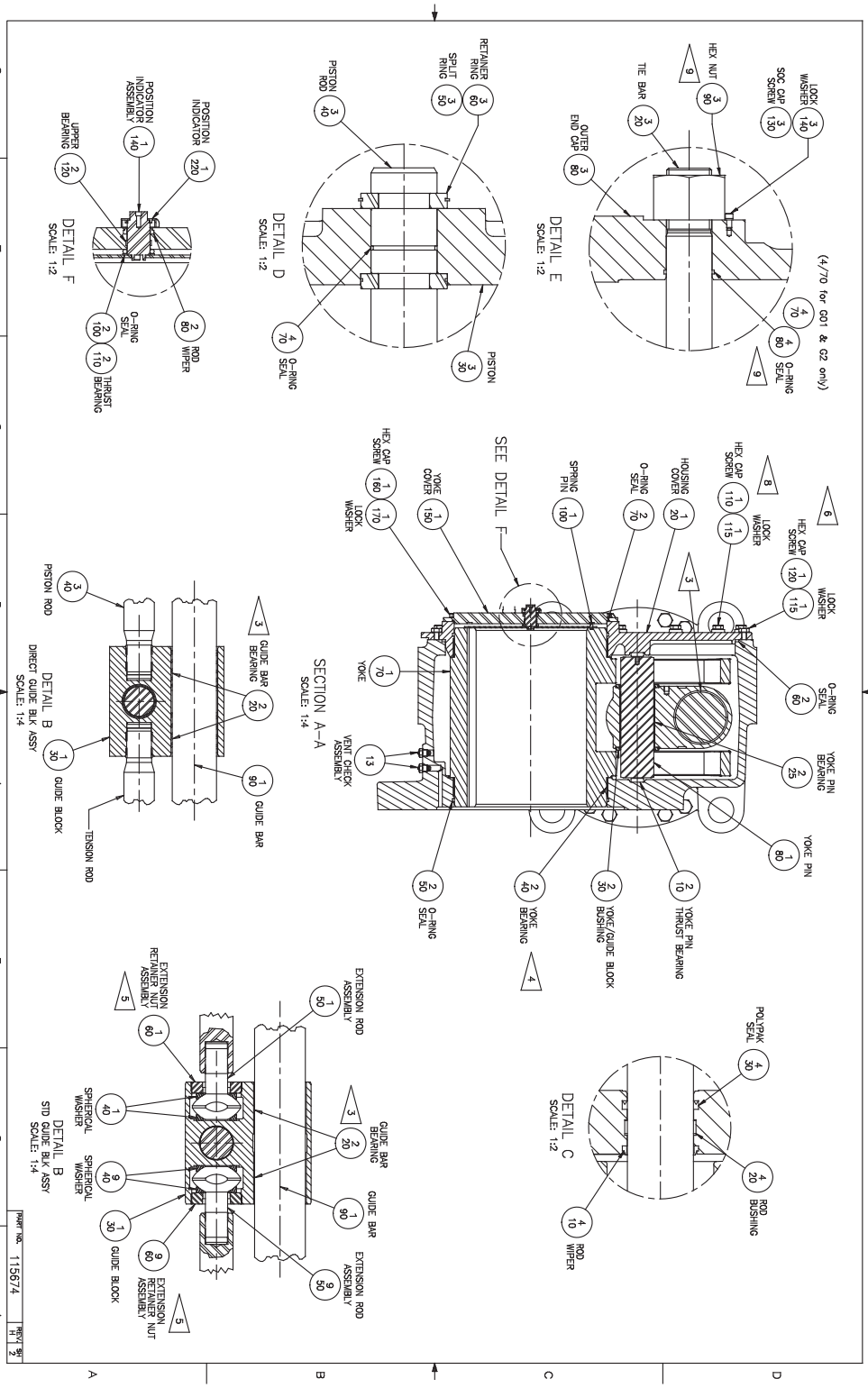

A.5 Part No. 115674, GXXXX-SRX Pneumatic Assembly Drawing, Sheet 1 of 2

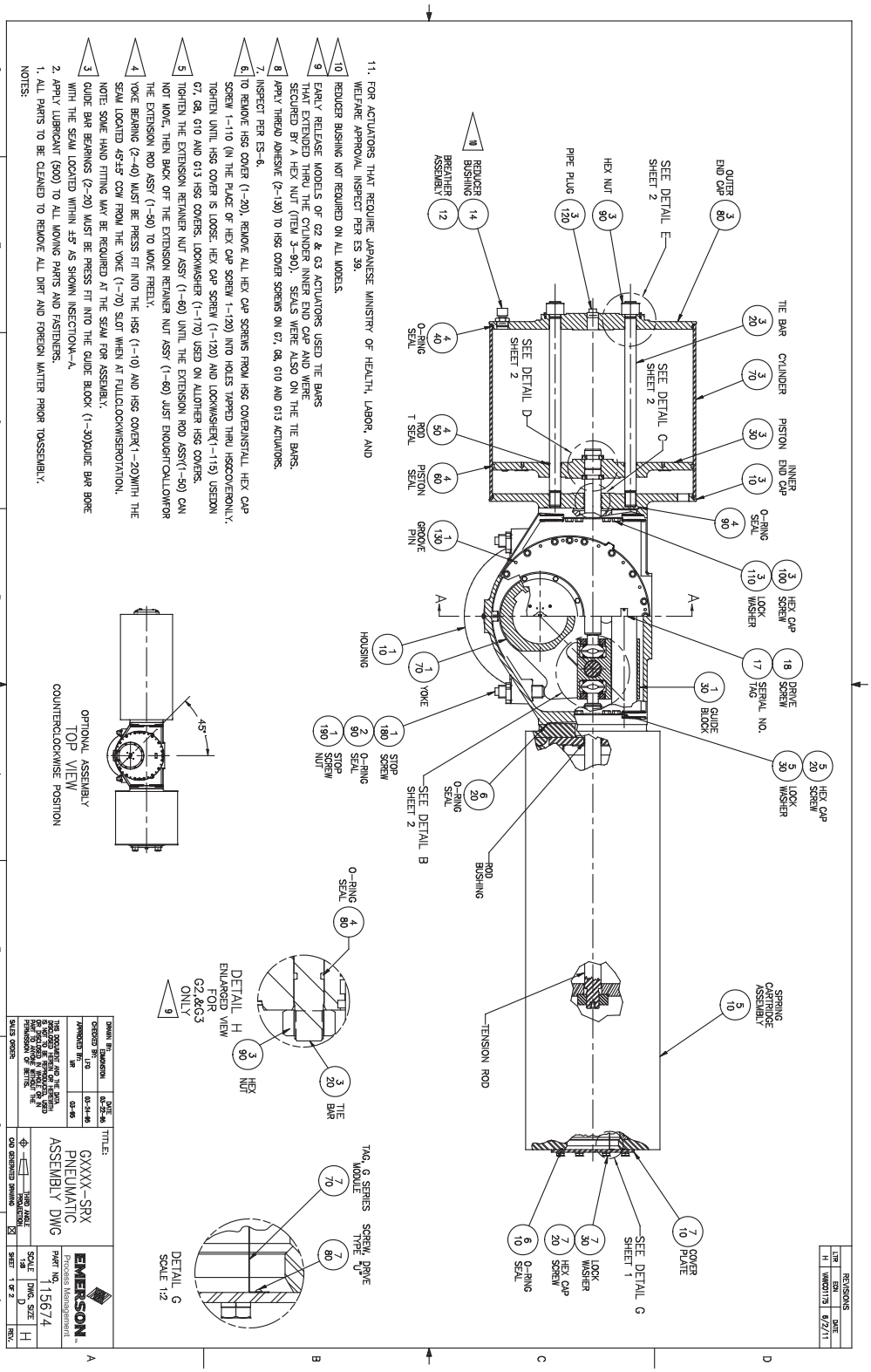

A.6 Part No. 115674, GXXXX-SRX Pneumatic Assembly Drawing, Sheet 2 of 2

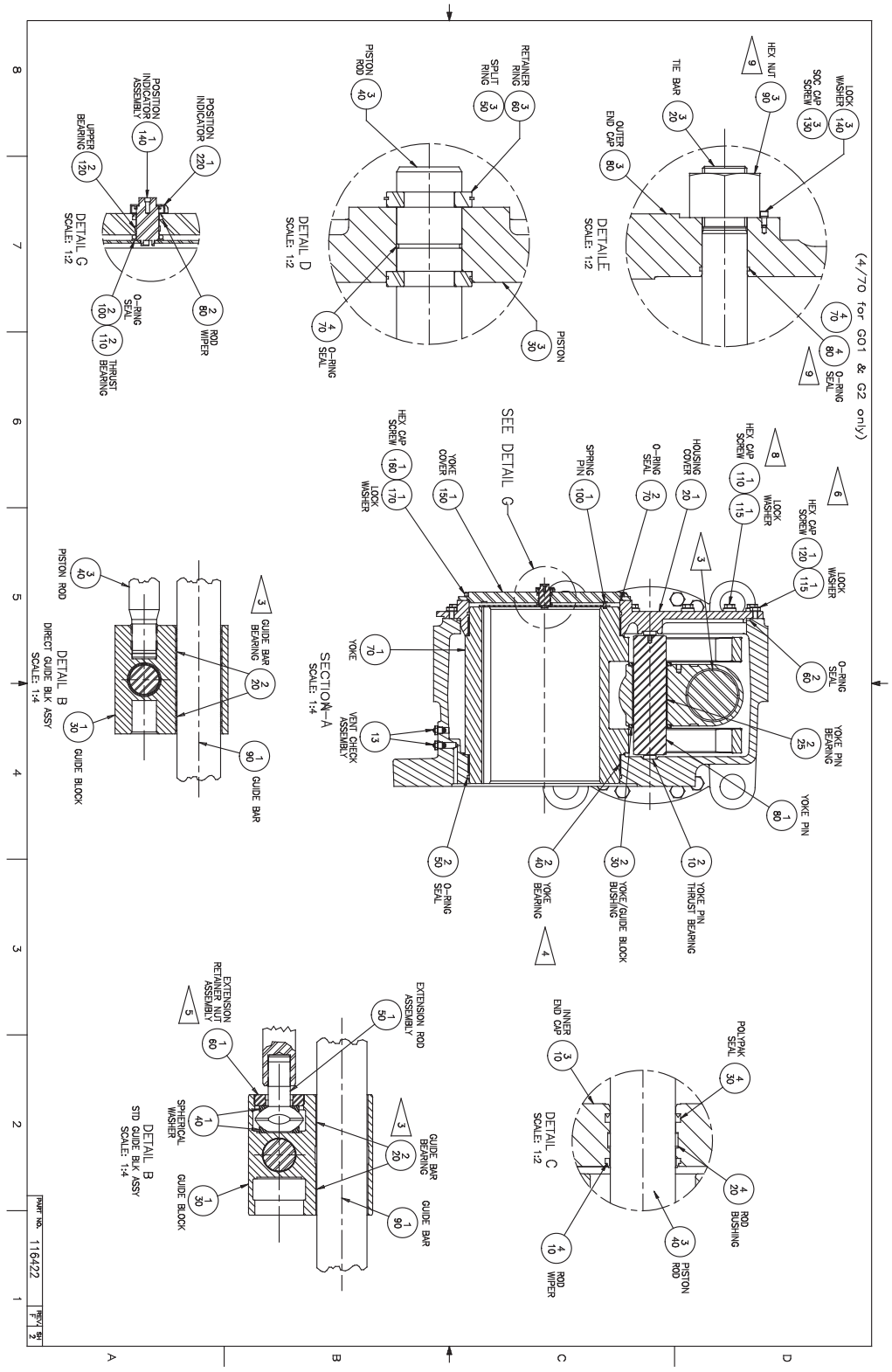

A.7 Part No. 140952, GH/GHCXXXX-SRX Pneumatic Assembly Drawing, Sheet 1 of 2

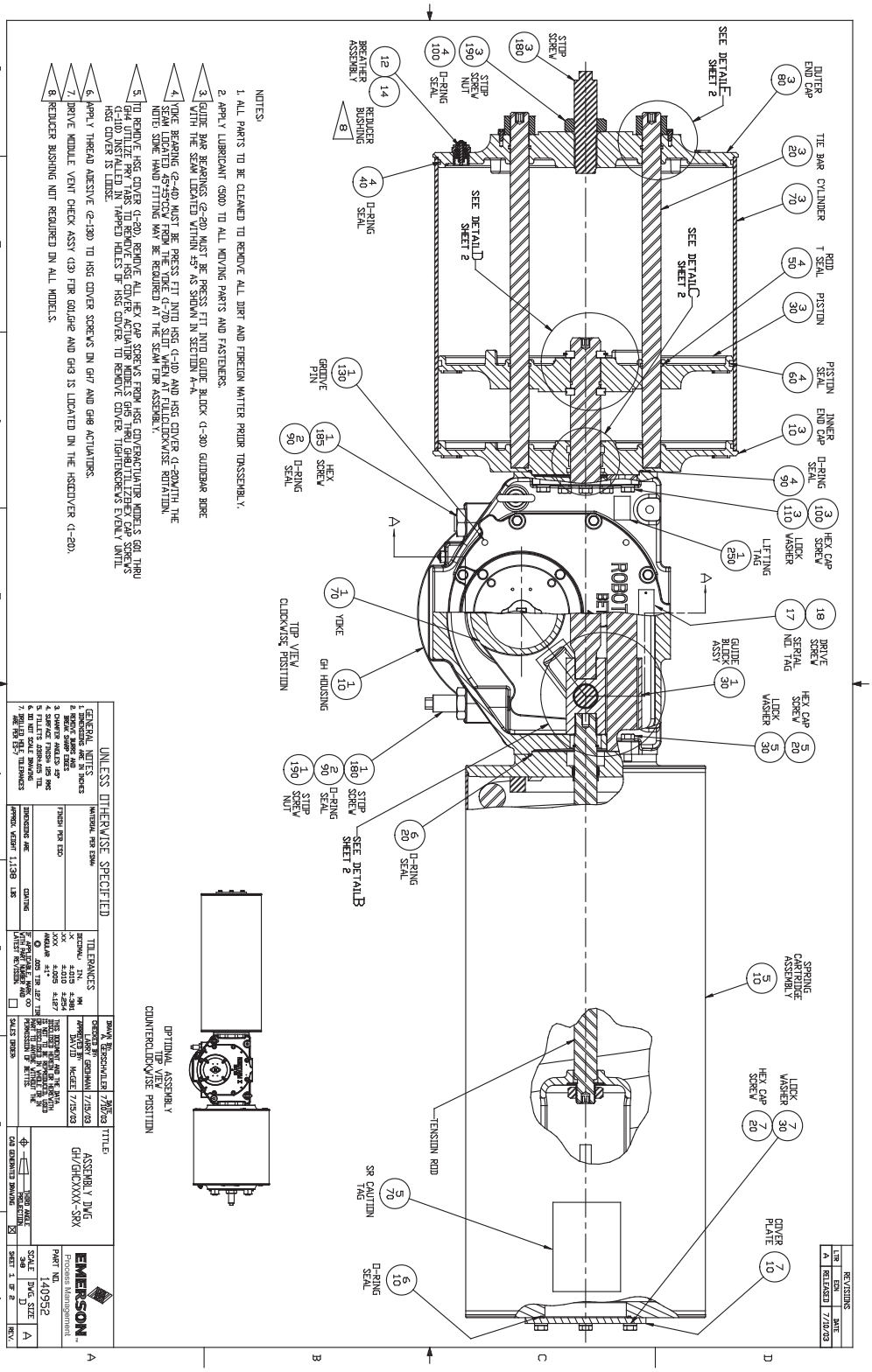

A.8 Part No. 140952, GH/GHCXXXX-SRX Pneumatic Assembly Drawing, Sheet 2 of 2

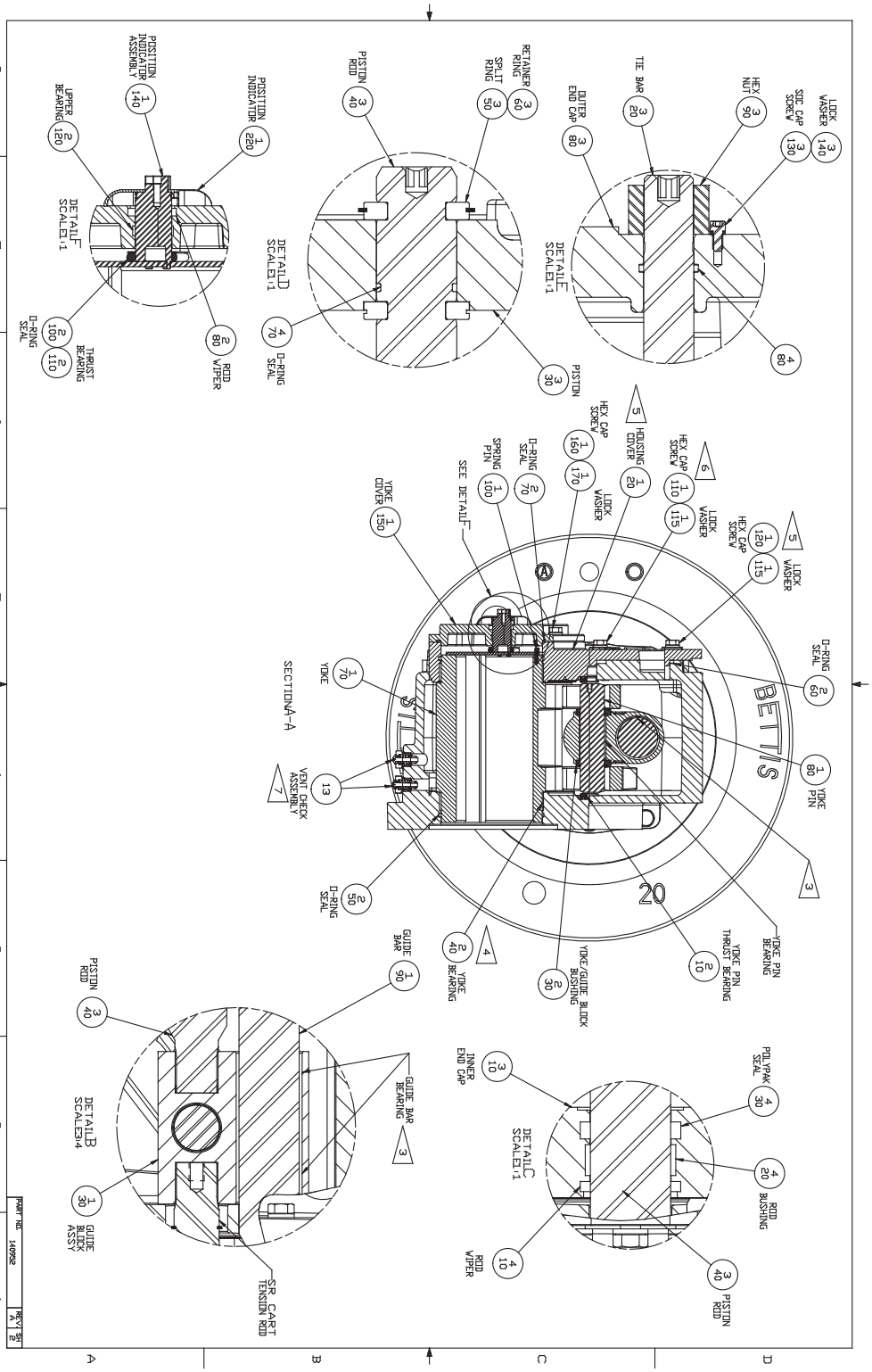

World Area Configuration Centers (WACC) offer sales support, service, inventory and commissioning to our global customers.
Choose the WACC or sales office nearest you:

NORTH & SOUTH AMERICA

19200 Northwest Freeway
Houston TX 77065
USA
T +1 281 477 4100

Av. Hollingsworth
325 Iporanga Sorocaba
SP 18087-105
Brazil
T +55 15 3413 8888

ASIA PACIFIC

No. 9 Gul Road
#01-02 Singapore 629361
T +65 6777 8211

No. 1 Lai Yuan Road
Wuqing Development Area
Tianjin 301700
P. R. China
T +86 22 8212 3300

MIDDLE EAST & AFRICA

P. O. Box 17033
Jebel Ali Free Zone
Dubai
T +971 4 811 8100

P. O. Box 10305
Jubail 31961
Saudi Arabia
T +966 3 340 8650

24 Angus Crescent
Longmeadow Business Estate East
P.O. Box 6908 Greenstone
1616 Modderfontein Extension 5
South Africa
T +27 11 451 3700

EUROPE

Holland Fasor 6
Székesfehérvár 8000
Hungary
T +36 22 53 09 50

Strada Biffi 165
29017 Fiorenzuola d'Arda (PC)
Italy
T +39 0523 944 411

For complete list of sales and manufacturing sites, please visit
www.emerson.com/actuationtechnologieslocations or contact us at
info.actuationtechnologies@emerson.com

www.emerson.com/bettis

VCIOM-13493-EN ©2021 Emerson. All rights reserved.

The Emerson logo is a trademark and service mark of Emerson Electric Co.
Bettis™ is a mark of one of the Emerson family of companies.
All other marks are property of their respective owners.

The contents of this publication are presented for information purposes only, and while every effort has been made to ensure their accuracy, they are not to be construed as warranties or guarantees, express or implied, regarding the products or services described herein or their use or applicability. All sales are governed by our terms and conditions, which are available on request. We reserve the right to modify or improve the designs or specifications of our products at any time without notice.

BETTIS™

EMERSON™