User Instructions
MAN-02-04-60-0351-EN Rev. 8
October 2023

Operating Manual for Bettis RTS FQ Series

Fail-Safe Quarter-Turn Electric Actuator

BETTIS™

EMERSON™

This page intentionally left blank.

Table of Contents

Section 7: Display Control Unit

Section 8: Parameter Menu

Section 9: Status Area

Section 10: Infrared Connection

Section 11: Bluetooth Connection

Section 12: Maintenance

Section 13: Troubleshooting

Section 14: Fuses

Section 15: Spare Parts

Section 16: Lubricant Recommendations and Requirements

Section 17: Modes of Operation

Section 18: Technical Data and Certifications

Section 19: Characteristic Curves

Appendix A:Handwheel Force

Section 1: Introduction

NOTE:

Also refer to the operating manual for Bettis RTS CM Compact Multi-Turn Series.

Bettis RTS FQ Fail-Safe Quarter-Turn electric actuators are designed to operate valves that require 90° rotation (quarter-turn) and a fail-safe functionality is required.

Butterfly valves, ball valves and taps in general are some examples of the Bettis RTS FQ Fail-Safe Quarter-Turn field of application.

In the event of a power failure or if the fail-safe function is triggered deliberately, the actuator shifts the valve to the fail-safe position, using the built-in energy storage device to do so.

Figure 1. Bettis RTS FQ Fail-Safe Quarter-Turn Actuator

Section 2: Functional Description of the RTS FQ Fail-Safe Quarter-Turn Actuator

In normal operation, the actuator is operated by a PM motor (1) via a worm gear stage (2) and a planetary gear train (3). The motor drives the spindle nut of a ball screw (4). The sun gear shaft of the planetary gear train is fixed in place by an operating current brake (5).

The ball screw converts the rotational movement of the gear unit into linear motion, which, on the other hand, charges the spring assembly (7), which acts as an energy storage device. On the other hand, a rack and pinion gear (6) convert the linear motion into the 90° output motion to move the valve shaft (9).

There are no engaging or disengaging elements between the motor. The energy storage device and the fitting shaft in the actuator. All the gear unit components are permanently engaged.

While moving against the fail-safe direction, the electric motor has to move both the fitting and the energy storage device (spring) for the fail-safe stroke.

If the supply for the operating current brake is interrupted by a power failure, or intentionally triggers a fail-safe stroke, the actuator will no longer hold position, and the energy stored in the spring will be converted into kinetic energy so as to move the actuator and thus the fitting shaft to the fail-safe position. In this situation, the entire gear chain for the actuator with the exception of the worm gear stage will be moved until the adjustable mechanical end stop (8) is reached or, if applicable, be stopped for the fitting shaft.

Owing to this operating principle, neither an initializing stroke nor resetting of the drive is required after a fail-safe stroke. As soon as the power supply is restored, the actuator is immediately ready for operation.

Figure 2. Cut-Out of the RTS FQ Fail-Safe Quarter-Turn Actuator

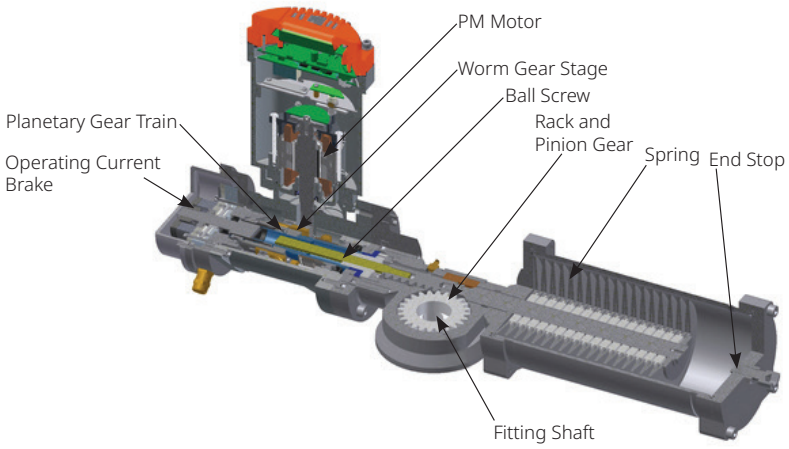

2.1 Fail-Safe Direction

This fail-safe actuator can be built as a version for “fail-safe CCW” (counterclockwise direction of rotation when looking at the fitting shaft) or “fail-safe CW” (clockwise direction of rotation). It is possible to subsequently change the fail-safe direction but some assembly work is required (see RTS - Change Fail-Safe Position FSQT IOM). Having this conversion performed at our factory is recommended.

Figure 3. Fail-Safe Counterclockwise (CCW) Version

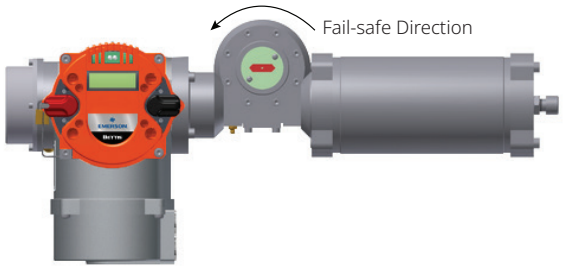

Figure 4. Fail-Safe Clockwise (CW) Version

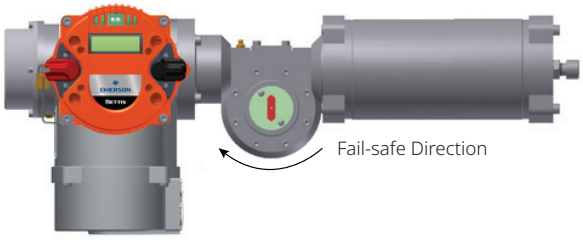

2.2 Moving Behavior of the Actuator

How the actuator moves to the end limits depends on whether the actuator is in fail-safe mode or in electrical mode.

2.2.1 Moving Behavior Electrical Mode

2.2.1.1 Moving in Fail-Safe Direction

In this case the actuator moves in fail-safe direction electrically by motor till the adjusted electrical end position. If the end limit is set travel dependent, the actuator stops at this point. If the end limit is set torque dependent, the actuator moves electrically till the end position. In the end position, the electrical holding brake is released and the actuator build up the torque by the tensioned spring.

NOTE:

For torque dependent end limit the end position should be set in a sufficient range before the mechanical end position to avoid damage on the valve.

2.2.1.2 Moving Counter Fail-Safe Direction

The actuator moves to the end position electrically by motor. If the end limit is set torque dependent, the torque is built up by the motor.

NOTE:

For torque dependent end limit the end position should be set in a sufficient range before the real end position to avoid damage on the valve.

2.2.2 Moving Behavior Fail-Safe Mode

2.2.2.1 Moving in Fail-Safe Direction

In fail-safe mode, the actuator can only move in fail-safe direction. When the electrical holding brake is released, the actuator moves against the end limit by spring. In this case, the end limit is generally torque dependent. The torque in end position is build up by the residual spring torque. Travel dependent positioning of the end limit is possible by adjusting the mechanical end stops from the actuator. Thus, the mechanical end position can be set from 85° to 95°.

⚠ CAUTION

The mechanical end stops in the actuator are not designed to be moved against by torque regularly.

Section 3: General

3.1 Safety Instructions

⚠ CAUTION

When operating electrical devices, certain parts are inevitably under dangerous voltage. Work on the electrical systems or components may only be carried out by electricians or by individuals who have been instructed how to do so, working under the guidance and supervision of an electrician in accordance with electrochemical regulations.

⚠ WARNING

When working in potentially explosive areas, refer to European Standards EN 60079-14 “Installing Electrical Systems in Explosion Endangered Areas” and EN 60079-17 “Inspection and Maintenance of Electrical Installations in Explosion Endangered Areas”. Working in potentially explosive areas is subject to special regulations (European Standard EN 60079-17), which must be complied with. Any additional national regulations must be heeded.

⚠ CAUTION

Work on the open actuator under voltage may only be done if it is certain that there is no danger of explosion for the duration of the work.

3.2 Serial Number

Each actuator of the Bettis RTS FQ Series has a metal TAG containing the 13 digit Serial Number, 10-digit actuator KEY and the Actuator Type.

Serial Number XXXXXX . XXX.X - XX

Sales Order Line Number Unique Unit

KEY XX XXXEXXXXX

Year Design, Technical Data and Test Report

Type

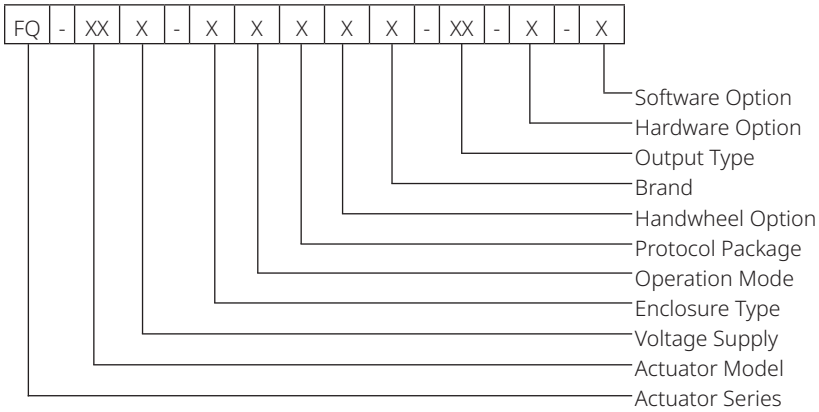

3.3 Protection Class

Bettis RTS FQ Fail-Safe Quarter-Turn actuators come by default with IP 68 (EN 50629) protection.

⚠ CAUTION

The protection class specified on the type label is only effective when the cable glands also provide the required protection class, the cover of the connection compartment is carefully secured closed, and the mounting position (see Section 3.4) is observed.

We recommend metallic threaded cable glands with a metrical thread. Unused cable inlets must be closed with stopping plugs.

⚠ CAUTION

On explosion proof actuators, cable glands with protection class EEx e according EN60079-7 must be used. After removing covers for assembly purposes or adjustment work, take special care upon reassembly so that seals are not damaged and remain properly fastened. Improper assembly may lead to water ingress and to failures of the actuator.

The front display module/control operating unit must not be opened.

Allow a certain sag in the connector cables before reaching the screwed cable glands so that water can drip off from the connector cables without running to the screwed cable glands. As a result, forces acting on the screwed cable glands are also reduced, see Section 3.4.

3.4 Mounting Position

Generally, the installation position is irrelevant. However, based on practical experience, it is advisable to consider the following for outdoors use or in splash zones:

- Mount actuators with cable inlet facing downwards.
- Ensure that sufficient cable slack is available.

3.5 Direction of Rotation

⚠ CAUTION

The standard direction of rotation for the actuator is:

- Clockwise = The actuator runs counter to the fail-safe direction
- Counterclockwise = The actuator runs in the fail-safe direction

The direction of rotation of the actuator for opening or closing depends on:

- The fail-safe direction of the actuator
- The closing direction of the valve

All the information in this Operating Manual refers to the standard direction of rotation.

3.6 Protective Devices

3.6.1 Torque

Bettis RTS FQ Fail-Safe Quarter-Turn actuators provide electronic torque monitoring. The switch off torque can be modified in the controller menu for each direction separately. By default, switch off torque is set to the ordered value. If no torque was specified with the order, the actuator is supplied from the factory with the maximum configurable torque. For more information, see Section 8.2.

3.6.2 Motor Temperature

All Bettis RTS Fail-Safe Quarter-Turn electrical actuators are normally equipped with motor winding temperature sensors, which protect the motor against excessive winding temperature. The display will show the corresponding error upon exceeding the permissible motor temperature, see Section 13.1.

3.6.3 Input Fuse, Thermal Fuse

The frequency inverter is protected by an input fuse and the explosion proof version has an additional thermal fuse. If one of the fuses is blown, a serious defect might occur and the frequency inverter must be replaced.

3.7 Ambient Temperature

Unless otherwise specified upon ordering, the following operating temperatures apply:

- On/Off duty (open-loop control) -25 to +60 °C
- Modulating duty (closed-loop control) -25 to +60 °C
- Explosion proof version -20 to +40 °C (according to EN 60079-0)
- Explosion proof version with extended temperature range -40 to +60 °C

⚠ CAUTION

The maximum operating temperature can also depend on further order-specific components. Please refer to the technical data sheets to confirm the as delivered product specifications.

3.8 Delivery Condition of the Actuators

For each actuator, an inspection report is generated upon final inspection.
In particular, this comprises a full visual inspection, calibration of the torque measurement in connection with an extensive run examination and a functional test of the microcontrollers.

These inspections are conducted and documented according to the quality system and can be made available if necessary.

The basic setting of the end position must be performed after assembly on the actuator.

⚠ CAUTION

Commissioning instructions (see Section 6) must be strictly observed.
During assembly of the supplied valves at the factory, end positions are set and documented by attaching a label. During commissioning at the plant, these settings must be verified.

3.9 Information Notice (Tag)

Each actuator is provided with a bilingual tag containing key information, which is attached to the handwheel after final inspection. This tag also shows the internal commission registration number, see Figure 5.

Figure 5. Tag

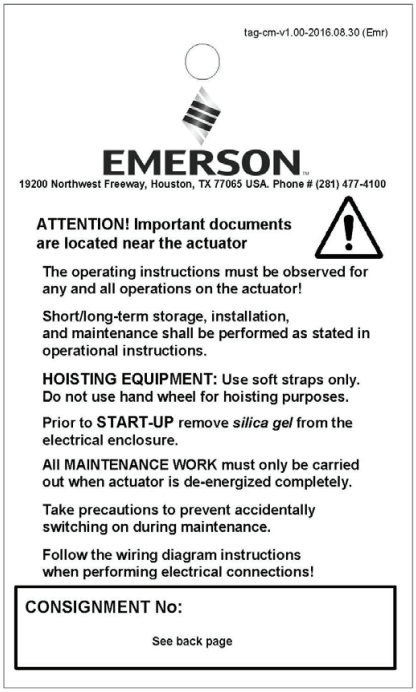

Section 4: Transport and Storage

Depending on the order, actuators may be delivered packed or unpacked. Special packaging requirements must be specified when ordering. Please use extreme care when removing or repackaging equipment.

⚠ CAUTION

Use soft straps to hoist the equipment; do not attach straps to the handwheel. If the actuator is mounted on a valve, attach the straps to the valve and not to the actuator.

4.1 General

The connection compartment of RTS CM actuators contains 5 g of factory supplied silica gel.

NOTE:
Please remove the silica gel before commissioning the actuator (see Section 6).

4.2 Storage

⚠ CAUTION

- Store actuators in well-ventilated, dry premises
- Protect against floor dampness by storing actuators on wooden grating, pallets, mesh boxes or shelves
- Protect the actuators against dust and dirt with plastic wrap
- Actuators must be protected against mechanical damage
- The storage temperature must be between -20 to +40 °C

It is not necessary to open the controller of the actuator for servicing batteries or similar operations.

4.3 Long-Term Storage

⚠ CAUTION

If you intend to store the actuator for over 6 months, also follow the instructions below:

- The silica gel in the connection compartment must be replaced after 6 months of storage (from date of delivery).
- After replacing the silica gel, brush the connection cover seal with glycerin. Then, carefully close the connection compartment again.
- Coat screw heads and bare spots with neutral grease or long-term corrosion protection.
- Repair damaged paint work arising from transport, improper storage, or mechanical influences.
- Every 6 months, all measures and precautions for long-term storage must be checked for effectiveness and corrosion protection and silica gel renewed.

⚠ WARNING

For explosion proof actuators, it is not allowed to extensively over paint the actuator. According to the standard, in order to avoid electrostatic charge, the maximum thickness of the varnish paint is limited to 200 µm.

NOTE:

Failure to follow the above instructions may lead to condensation which can damage to the actuator.

Section 5: Installation Instructions

Installation work of any kind for the actuator may only be performed by qualified personnel.

5.1 Mechanical Connection

Check:

- Whether the valve flange, actuator flange and valve shaft correspond to the shaft connector of the actuator.
- Whether the thread of the valve matches the thread of the actuator.
- Whether there is sufficient engagement of the valve shaft in the actuator hole.

⚠ WARNING

Do not apply power to the actuator during installation.

The actuator is the fail-safe position during transportation and delivery due to the absence of power. Before applying power to the actuator, make sure the valve is in the same position as the actuator.

- For a “fail-safe open” actuator, the valve must be completely open.
- For a “fail-safe close” actuator, the valve must be completely closed.

In general, proceed as follows:

- Clean the bare parts on the actuator coated with corrosion protectant.
- Clean the mounting surface of the valve thoroughly.
- Lightly grease the valve shaft.
- Set the actuator in place.
- Make sure of centered positioning and that the contact surface of the flange is full.
- Fasten the actuator with suitable bolts:
  - Minimum strength grade: 8.8 or A2-70
  - Ensure sufficient thread engagement (minimum 1xd)

⚠ CAUTION

Screws that are too long may go against the thread root, creating the risk of the actuator moving radially in relation to the valve. This may lead to the bolts shearing off. Unsuitable bolts may result in the actuator falling off.

- Tighten bolts to the correct torque, alternating between bolts on opposite sides.

Table 1. Torque Thread Table

Thread	Tightening Torque (Nm) for Bolts with Strength Grade	
	8.8	A2-70/A4-70
M6	11	8
M8	25	18
M10	51	36
M12	87	61
M16	214	150
M20	431	294
M30	1489	564

NOTE:
For output type A (unbored threaded bushing), you must sufficiently lubricate both needle bearings in the output form after processing and cleaning the spindle nut.

For this purpose, use the optional Emerson grease lubricant or a grease lubricant according to our recommendation (see Section 16).

5.2 Mounting Position of the Display Unit

The mounting position of the operating unit can be rotated in 90° steps.

⚠ CAUTION

During installation, the position of the control unit in relation to direct sunlight must be observed. It is recommended to protect the unit from direct sunlight (roof, installation position) to avoid possible malfunctions.

Figure 6. Control System Mounting

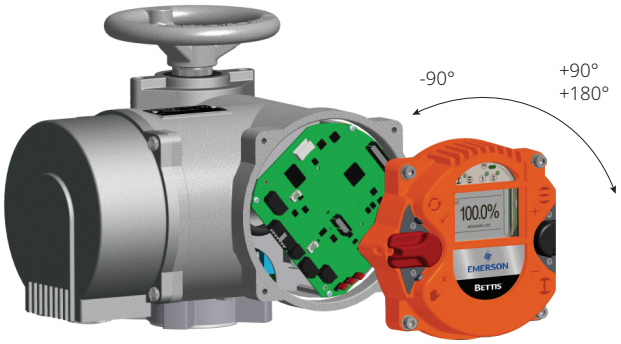

- Disconnect the actuator from the power supply.
- To prevent damage to the electronic components, ensure the display control unit and the service technician are earth grounded when handling the electronics.
- Unscrew the bolts from the display control unit and carefully dismount the cover without damaging the cables.
- Mounting the display control unit to the new position.
  - Inspect the O-ring.
  - Rotate the display control unit to the desired position.
  - Mount the display control unit back to the actuator.
  - Screw the bolts evenly in a crosswise sequence with a max. torque of 5 Nm.

5.3 Electrical Connection

Electrical connections may only be carried out by qualified personnel. Please observe all relevant national security requirements, guidelines and regulations. The equipment should be de-energized before working on electrical connections. As a first step connect the ground screw and confirm the absence of electrostatic discharge during connection.

The line and short circuit protection must be done on the system side. The ability to unlock the actuator for maintenance purposes must be provided. For the dimensioning, the rated current is to be used (see Technical Data).

Check whether the power supply (voltage, frequency) is consistent with the connection data. The connection of electrical wiring must follow the circuit diagram. This can be found in the appendix of the documentation. The circuit diagram can be ordered from Emerson by specifying the serial number. When using options, such as a Profibus connection, the relevant guidelines must be followed.

5.3.1 Power Supply Connection

The Bettis RTS Fail-Safe Quarter-Turn electrical actuators feature an integrated motor controller, therefore only requires a connection to the power supply.
In non-explosion proof actuators, the wiring uses a connector independent from control signals (see Figure 7).

Figure 7. Power Supply Connections

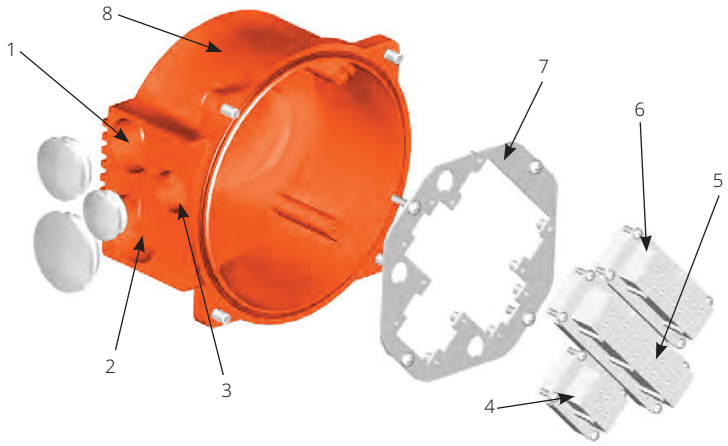

Parts Overview:

1. Metric Screw M32x1.5
2. M40x1.5
3. M25x1.5
4. Plug Insert (for power supply)
5. Plug Insert (for control cables)
6. Connector for Options
7. Connector Plate
8. Connecting Housing

The connection on explosion proof actuators will be made via terminals. This type of connection can be ordered on special request for the non-explosion proof actuators. (see Figure 8).

Figure 8. Terminal Box

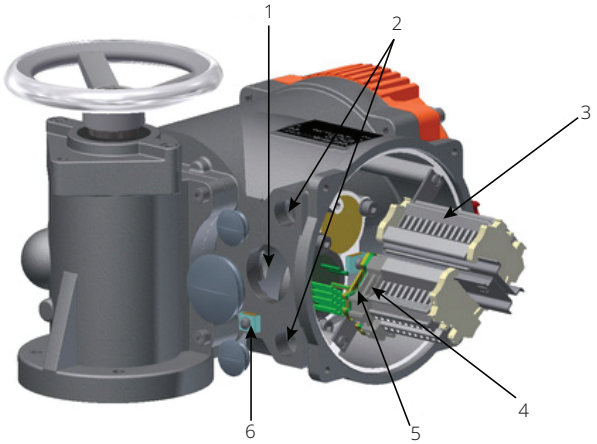

Parts Overview:

1. Metric Screw M40x1.5
2. 2xM20x1.5
3. Terminals for the Control Signals
4. Terminals for the Power Supply
5. Terminal for Ground Connection
6. External Ground Connection

⚠ CAUTION

If during outdoor installation, commissioning is not carried out immediately after electrical connection, the power supply must be connected at a minimum to achieve a heating effect. In this case, the silica gel may remain in the connection compartment until commissioning.

Section 6: Commissioning

It is assumed that the actuator has been installed and the electrical connection performed correctly, see Section 5.

Table 2. Technical Data

Type	Maximum Actuators Torque (Nm)			Revolutions on the Basic Actuator		
	In Fail-Safe Direction	Counter Fail-Safe Direction	Nominal (°)	Revolutions (U)	Maximum (°)	Revolutions (U)
FQ-03	8	17	90	16.02	100	17.8
FQ-06	8	29	90	15.71	100	17.45
FQ-10	16	64	90	9.42	100	10.47
FQ-20	16	57	90	31.42	100	34.9
FQ-30	16	62	90	39.27	100	43.63
FQ-50	16	64	90	60.87	100	67.63

6.1 General Information

NOTE:
When commissioning and each time after dismounting the actuator, the positions must be reset (see Section 6.5).

6.2 Manual Operation

The manual operation is only possible if the actuator is delivered with the optional handwheel. This option allows an adjustment of the valve in de-energized state.

⚠ CAUTION

- Handwheel can only be engaged and disengaged while actuator is in fail-safe position.
- By activating the manual drive, the electrical function of the drive is disabled. In normal operation, the handwheel has no effect.

Figure 9. RTS FQ Fail-Safe Actuator Handwheel Rotation

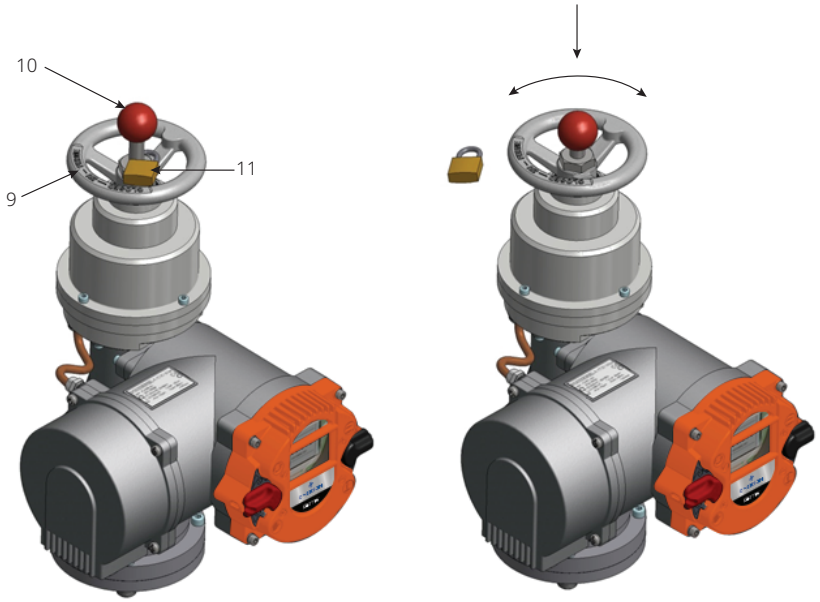

Parts Overview:

9. Handwheel
10. Coupling Rod
11. Padlock

6.2.1 Direction of Rotation Handwheel for Closing the Valve, Fail-Safe Direction “CW”

Figure 10. Rotation of Direction for Fail-Safe Direction “CW”

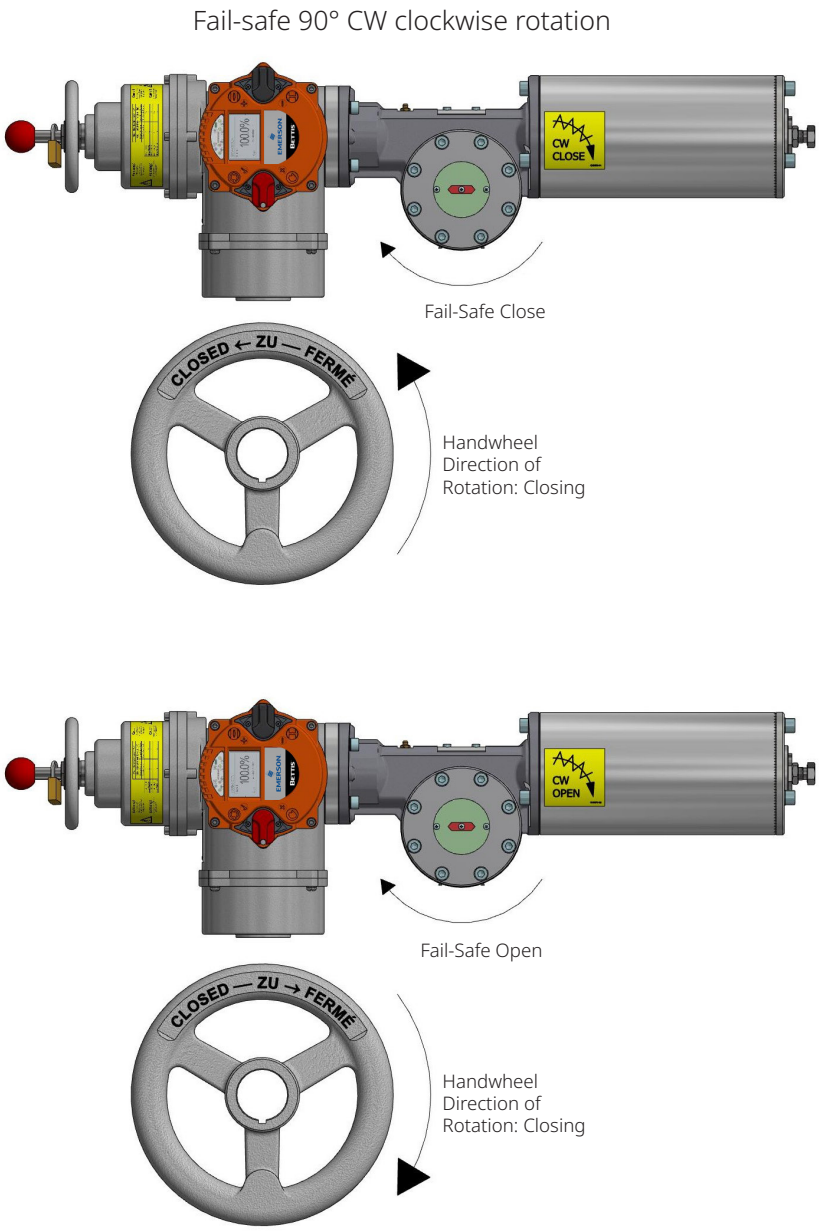

6.2.2 Direction of Rotation Handwheel for Closing the Valve, Fail-Safe Direction “CCW”

Figure 11. Rotation of Direction for Fail-Safe Direction “CCW”

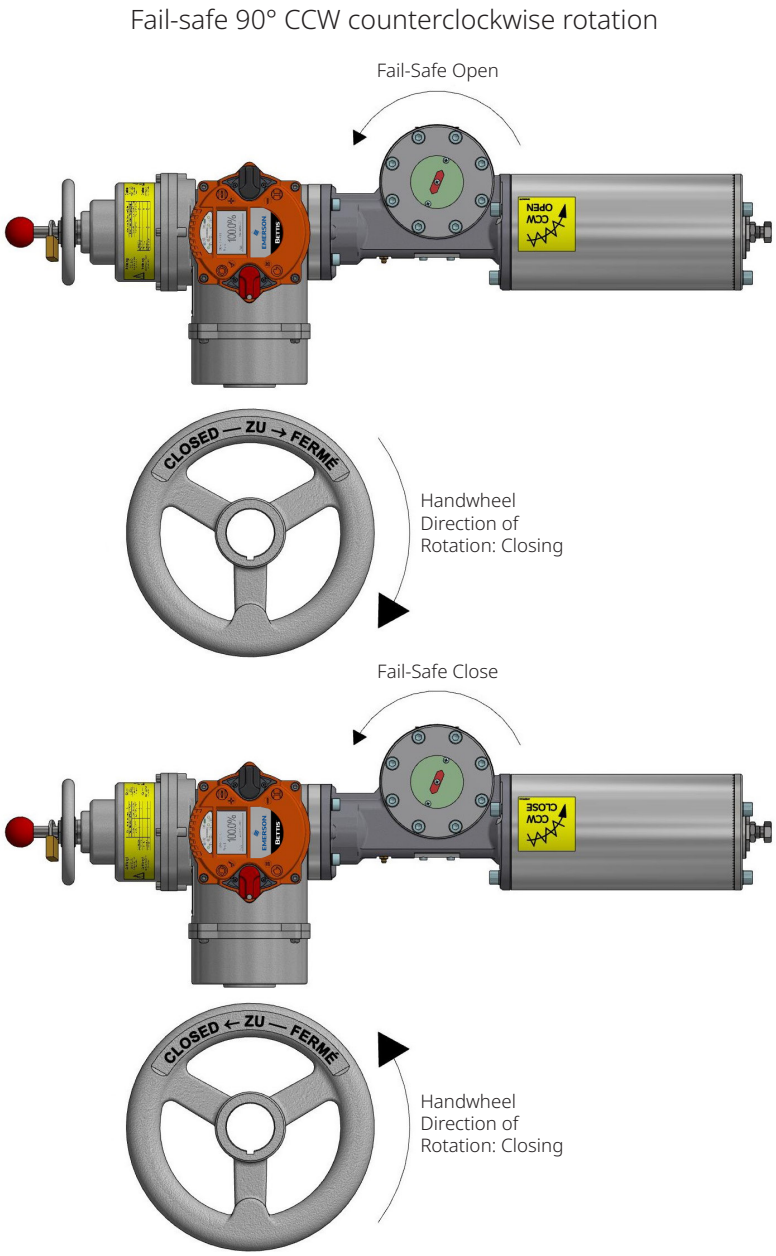

6.2.3 Activate Manual Operation

To activate manual mode:

- Ensure the actuator is in the fail-safe position.
- The padlock must be removed.
- The coupling rod must be pushed all the way into the actuator.

For easier clutch engagement move the handwheel easily back and forth.

Through the engagement the actuator is automatically electrically disabled and the display shows “manual operation”.

6.2.4 Deactivate Manual Operation

To exit the manual mode and enable the actuator again for the automatic mode:

- The actuator must be driven to the fail-safe position by the handwheel.
- The coupling rod be pulled up to the stop of the actuator.
- The coupling rod again secured with the padlock.

6.2.5 Required Force on the Handwheel

Table 3 shows the maximum force applied to the handwheel for the different actuator sizes.

Table 3. Required Force on the Handwheel

Type	Maximum Actuators Torque (Nm)		Handwheel Diameter (mm)
	In Fail-safe Direction	Counter Fail-safe Direction	
FQ-03	4	8.5	140
FQ-06	4	14.5	140
FQ-10	8	32	200
FQ-20	8	28.5	200
FQ-30	8	31	200
FQ-50	8	32	200

Notes:
- The force on the handwheel was calculated for one-handed operation. With two-hand operation, the value per hand is halved. The maximum force may be exceeded by 20% in manual mode.
- The direction of rotation and the maximal handwheel torque is available on the handwheel labels.

6.3 Mechanical Default Settings and Preparation

Fail-safe quarter-turn actuators require end limit settings.

⚠ CAUTION

Before the motorized operation of the valve, it is essential to check and adjust torque settings. See Section 8.2 for torque setting operation.

6.4 User Level and Permissions

In order to edit and/or show certain parameters, a user level with the necessary permissions has to be set as current user level. The current user level may be set temporarily in the "U User Level" menu item. It is also possible to set the default user level, which will be set as the current user level until set otherwise ("U User Level" or default user level). Please refer to Section 8.6 for more information about the user levels.

6.5 End Limit Setting

A detailed description of the operation of the Bettis RTS Fail-safe Quarter-Turn electrical actuator can be found in Section 7.3.

6.5.1 End Limit OPEN

Step 1 - Set the selector switch and control switch to the center position.

NOTE:

Please make sure that the current user level has the permission to edit the end limits.

Figure 12. Selector/Control Switch

Parts Overview:

1. Selector Switch (red)
2. Control Switch (black)

Step 2 - Scroll through the menu with the control switch. Move the control switch towards the first menu item “P1.1 End limit – Open”.

Figure 13. Control Switch (First Menu Item)

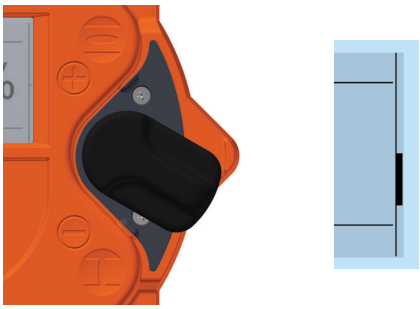

Figure 14. Display (1)

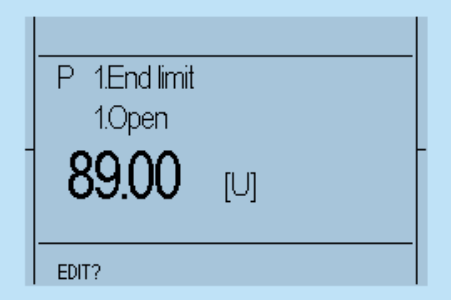

Step 3 - Afterwards, flip up the selector switch slightly and let it snap back to its neutral position.

Figure 15. Selector Switch in Neutral Position (1)

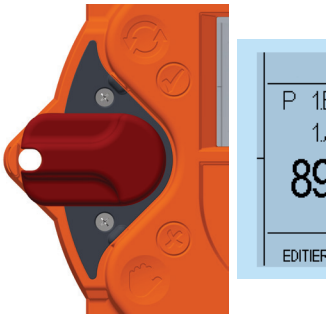

Figure 16. Selector Switch Flipped Up (1)

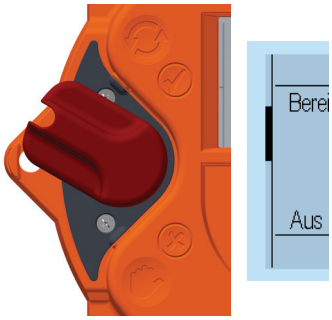

Figure 17. Selector Switch in Neutral Position (2)

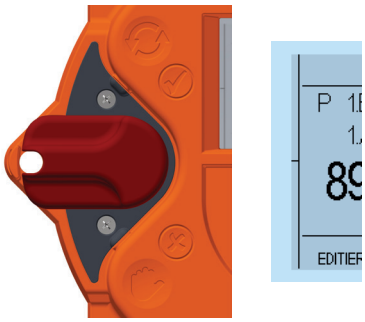

This changes the bottom line of the display from EDIT? to SAVE?

Figure 18. Display (2)

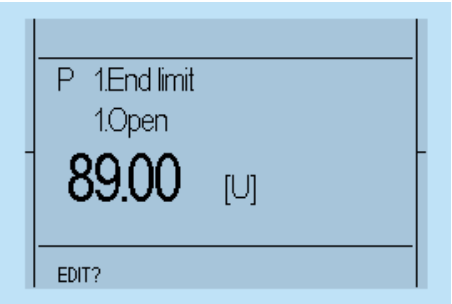

Figure 19. Display (3)

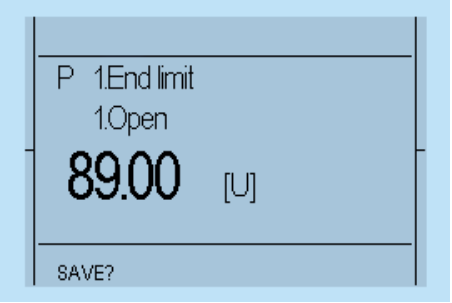

Step 4 - Then, push down the selector switch until it snaps into place. In doing so, the bottom right now on the display will show “TEACHIN”.

⚠ CAUTION

Once the display shows “TEACHIN”, use the control switch (black switch) to start the motorized operation of the actuator. In this mode, no travel-dependent switch off occurs in the end position.

⚠ CAUTION

Please note that during motor operation, only torque monitoring remains active as travel adjustment will happen subsequently. Therefore, please check beforehand whether the maximum torque has been already parameterized.

Step 5 - Absolute and relative values on the display will change continuously along with position changes.

Figure 20. Selector Switch Flipped Down

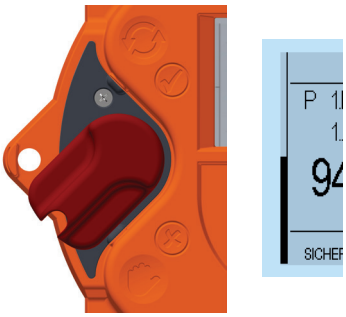

Figure 21. Display (4)

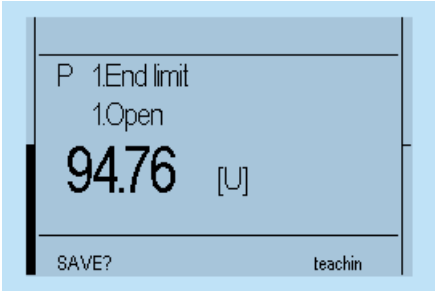

Step 6 - Manually move the actuator with the handwheel or by motor via the control switch (black button) to the end position OPEN of the valve.

- Absolute value: Absolute value of the position feedback.
- Relative value: The value to the other end position.

Figure 22. Display (5)

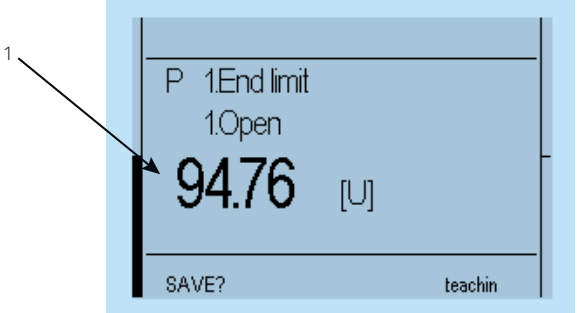

Display Overview:

1. Absolute value

Step 7 - When the desired end position OPEN of the valve is reached, move the selector switch back to the middle position. Thus, the line “TEACHIN” disappears.

Figure 23. Selector Switch in Neutral Position (4)

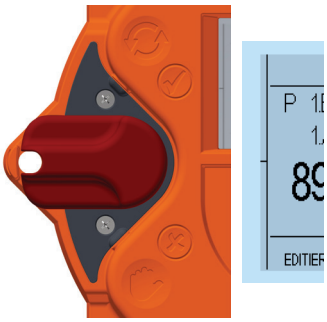

Figure 24. Display (6)

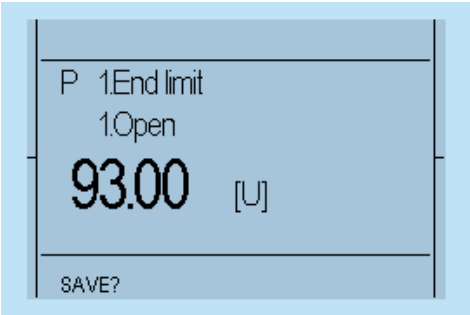

Step 8 - In order to confirm the end position (save), slightly flip up the selector switch and let it snap back to its neutral position.

Figure 25. Selector Switch in Neutral Position (5)

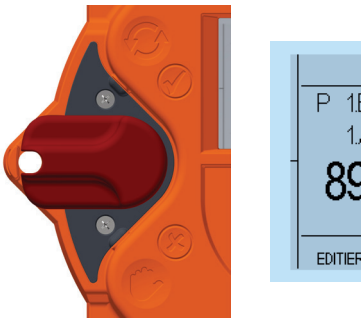

Figure 26. Selector Switch Flipped Up (2)

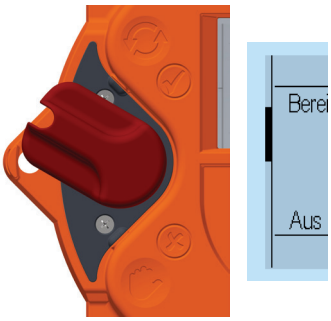

Figure 27. Selector Switch in Neutral Position (6)

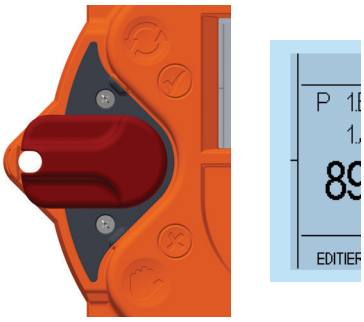

Step 9 - This changes the bottom line of the display for “SAVE?” to “EDIT?” and the end position is stored.

Figure 28. Display (7)

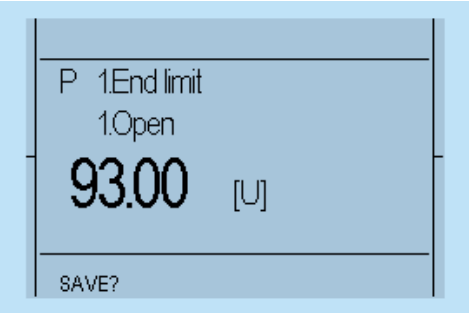

Figure 29. Display (8)

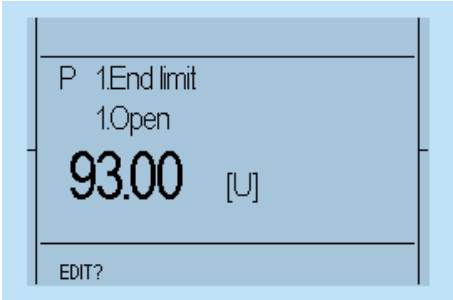

6.5.2 End Limit CLOSE

Repeat 6.5.1 but select “P1.2 End limit - End limit CLOSE”.

6.6 Setting the Mechanical End Stop

The RTS FQ Fail-Safe Quarter-Turn actuator only has one limited mechanical end stop that limits the travel at the fail-safe end position. The end stop is at the end of the spring cup.

Depending on the size of the actuator, the end stop can be combined with a hydraulic damper.

Figure 30. Mechanical End Stop (1)

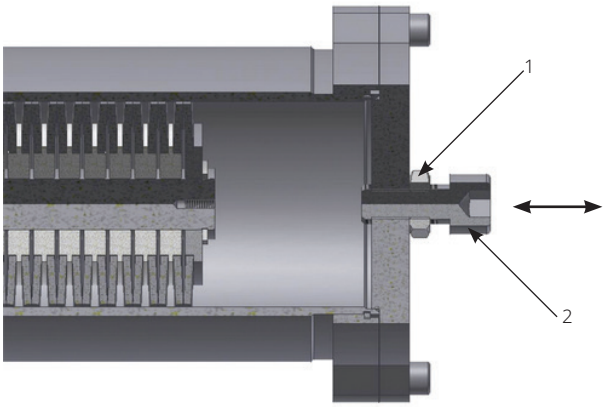

Parts Overview:

1. Lock Nut
2. End Stop

Figure 31. Mechanical End Stop (2)

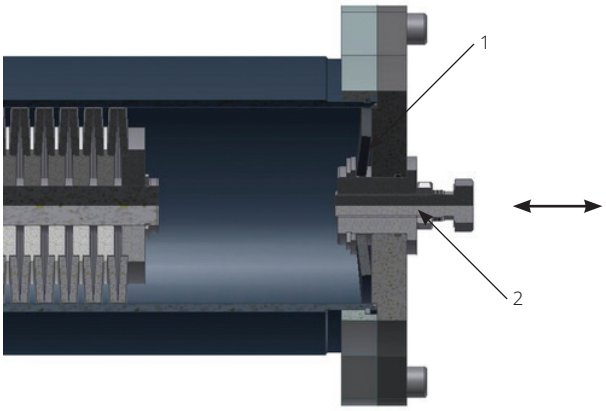

Parts Overview:

1. Lock Nut
2. End Stop

To adjust the end stop, first undo the locknuts. To lengthen the stroke by means of the end stop, unscrew the end stop out of the cover flange.

NOTE:
Upon delivery, the end stop is set to the maximum possible stroke. Further unscrewing causes no further extension of stroke; the end stop becomes ineffective.

Check:

- In fail-safe operation, let the actuator run against the stop.
- Despite the locknut being undone, it must not be possible to screw the end stop further into the cover flange.

NOTE:
If the stroke is to be shortened by means of the end stop, the actuator must not be in the fail-safe position. Before adjusting, it is necessary to move the actuator electrically at least 10% away from the end position.

After undoing the locknut, screw the end stop into the cover flange, and check the adjustment of the end stop by triggering a fail-safe stroke.

⚠ CAUTION

In electrical operation, it is not permissible for the mechanical end stop to be run into. After adjusting the mechanical end stop, check the setting of the travel end position and correct it if necessary. After completing the adjustment work, fix the locknuts back in place.

6.7 Adjusting of Fail-Safe Speed

Emerson Bettis RTS FQ Fail-Safe Quarter-Turn actuators are equipped with an adjustable passive eddy current brake, by which it is possible to change the fail-safe speed. When delivered the fail-safe speed is set to minimum.

After mounting the actuator to valve and test run, fail-safe speed can be increased if necessary.

NOTE:

Valve or piping may be damaged due to high actuating speed.

Setting Procedure:

All adjustment work may only be performed with the actuator disconnected from the power supply. Due to this requirement, the actuator must be in the fail-safe position. Any powering up must be ruled out during maintenance.

When working in potentially explosive areas, heed European Standards EN 60079-14 “Installing Electrical Systems in Explosion Endangered Areas” and EN 60079-17 “Inspection and Maintenance of Electrical Installations in Explosion Endangered Areas”.

Figure 32. Removing the Cover

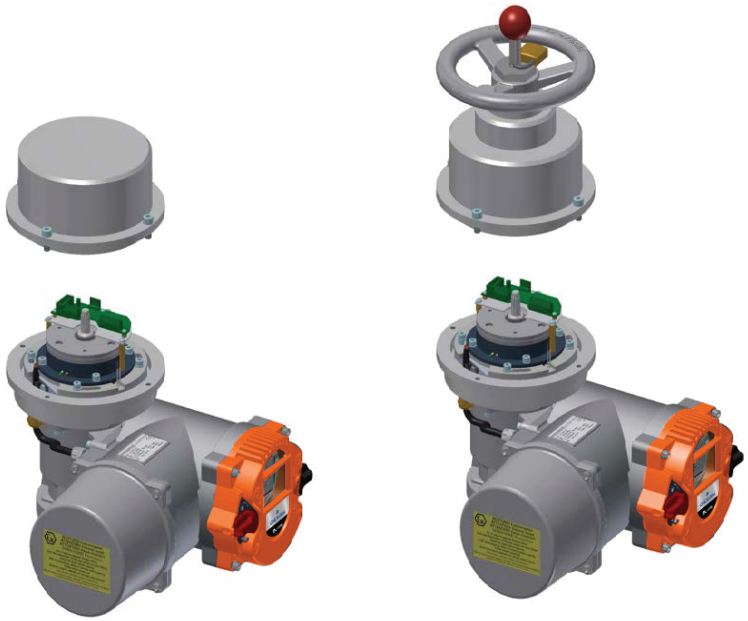

1. Remove cover according to Figure 32.
   Attention: In the version with handwheel there is a cable connection which must be unplugged.
2. Loosen but do not remove 4 pieces of screws according to Figure 33.
3. Insert 3 mm Allen key into radial borehole of flange.
4. Turn flange by use of Allen key in direction according to Figure 33. Half of possible rotating angle will approximately double fail-safe speed of actuator. While holding flange with key in desired position retighten screws.
5. In the version with handwheel reconnect the cable to the cover.
6. Remount the cover while be aware of correct position of O-ring sealing.
7. Retest actuator to check for correct fail-safe speed.

Figure 33. Adjusting Speed

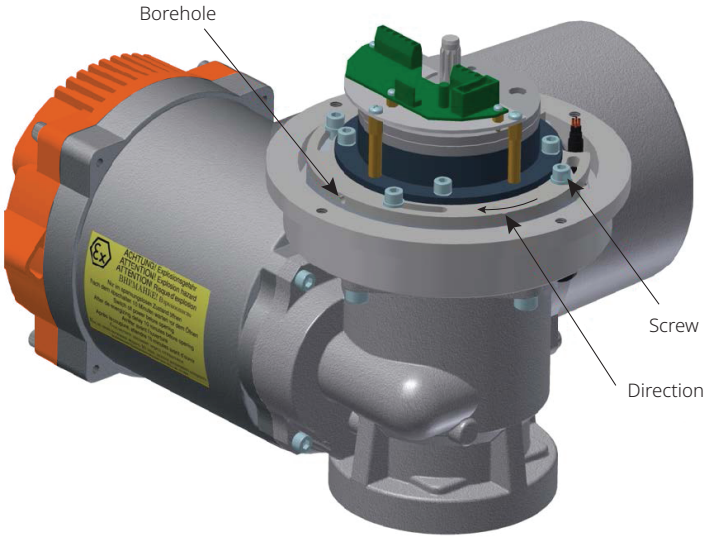

6.8 Final Step

Following commissioning, ensure covers a sealed and cable inlets are closed. Also, check the actuator for damaged paint (by transportation or installation) and take necessary steps to repair if needed.

Section 7: Display Control Unit

The display control unit is intended to monitor and control the actuator and provides the interface between the operator, the control system and the actuator.

7.1 Operation of the Display Control Unit

The operation of the display control unit relies on two switches: the control switch and a padlock-protected selector switch. Information visualization is provided by 4 integrated indicator lights as well as the graphic display. For better visibility, switch symbols (✓, ✕, ⊕, ⊖) are on the cover.

Figure 34. Selector/Control Switch Operating Unit

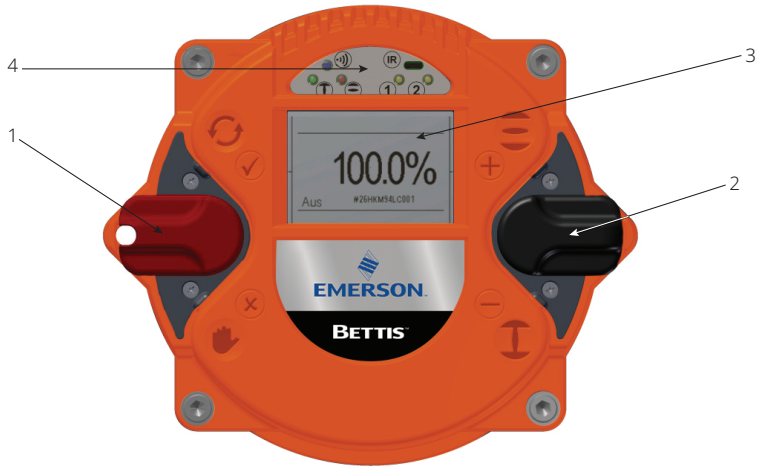

Parts Overview:

1. Selector Switch
2. Control Switch
3. Graphic Display
4. LED Display

The control switch has dual function.

The controller cover may be wiped clean with a damp cloth. The mounting position of the control unit can be turned in 90° steps (see Section 5.2).

7.2 Display Elements

7.2.1 Graphic Display

The graphic display used in the controller allows text display in different languages.

Figure 35. Display (9)

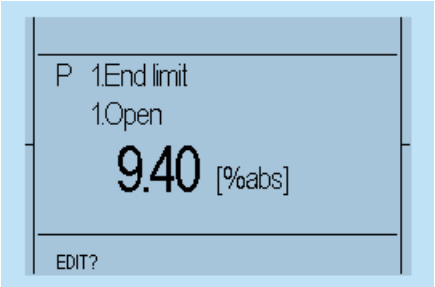

During operation, the display shows the position of the actuator as a percentage, operation mode and status. When using the option identification, a customer-specific label is shown at the bottom of the display (e.g., PPS Number).

Figure 36. Display (10)

Display Overview:

1. Status
2. Operation Mode
3. Position

⚠ CAUTION

The display should not be exposed to direct sunlight over a long period – risk of a defect in combination with very high temperatures.

7.2.2 LED Display

To provide users with better status information, basic status data is displayed using 4 color LEDs. As the device powers up, it undertakes a self-test whereby all 4 LEDs briefly light up simultaneously.

Figure 37. LED Display

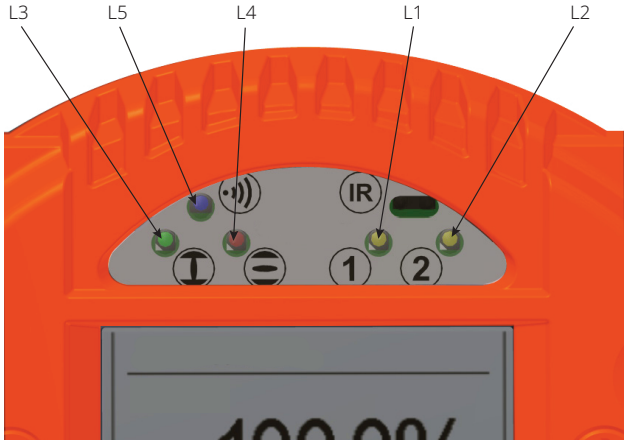

Table 4. LED Color Legend

Description	Color	Lights up	Flashes quickly	Flashes slowly	Does not light up
L1	Yellow	No torque error	Torque fault	-	-
L2	Yellow	Ready (operational readiness)	Path error (no operational readiness)	-	Error (no operational readiness) motor temperature, supply voltage absent, internal error
L4	Red	OPEN	Moving to OPEN position	Applies upon torque-dependent opening: Occurs when the end position OPEN is reached but the cut-out torque has not yet been reached	Actuator is not in the open position
L3	Green	CLOSED	Moving to CLOSED position	Applies upon torque-dependent closing: Occurs when the end position CLOSED is reached but the cut-out torque has not yet been reached	Actuator is not in the closed position
L5	Blue	Bluetooth® connected	Bluetooth data transmission	Bluetooth ON, not connected	Bluetooth/Infrared OFF
	Red	Infrared connected	Infrared connected	Infrared ON, not connected	

7.3 Operation

The actuator is operated via the switches located on the controller (selection and control switch). All actuator settings can be entered with these switches. Furthermore, configuration is also possible via the IR interface or the Bluetooth Interface (see Section 10). Flip the switch up or down to regulate the parameter menu scrolling speed.

Figure 38. Neutral Position

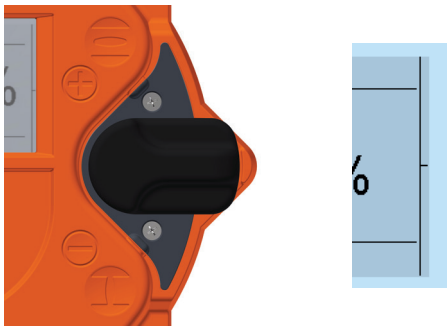

Figure 39. Slight Switch Flip (It Will Move to the Next Parameter)

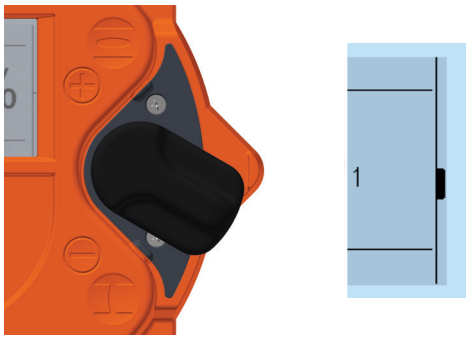

LED L1 and L2 can be changed by parameter P1.7, see Section 8.1.

Figure 40. Halfway Switch Flip (It Will Jump to the Next Parameter Category)

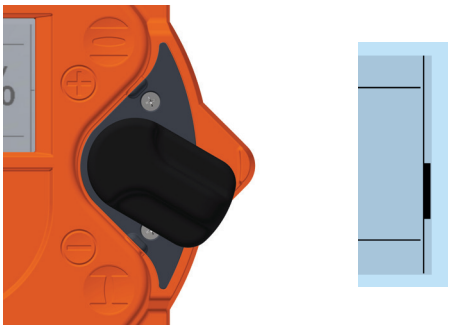

Figure 41. Full Switch Flip (It Will Jump to the End of the Menu)

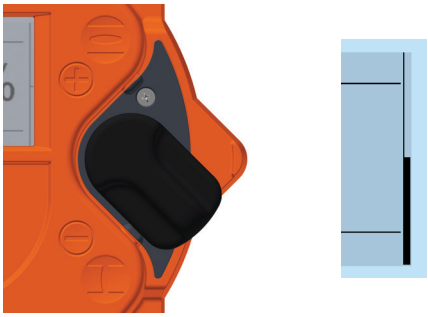

7.4 Welcome Menu

The welcome menu presents the user a welcome message, and guides the user through some basic settings. Some basic settings include the language and the time zone. Please follow the instructions shown on the display.

1. LEDs L1 and L2 are turned off as long as an infrared connection is active.
2. Color of LED L3 and L4 can be changed by parameter P1.7 - see Section 8.1, Parameter Group: End Limit.
3. A travel fault is indicated by a lit L3 and L4.

Figure 42. Welcome Menu

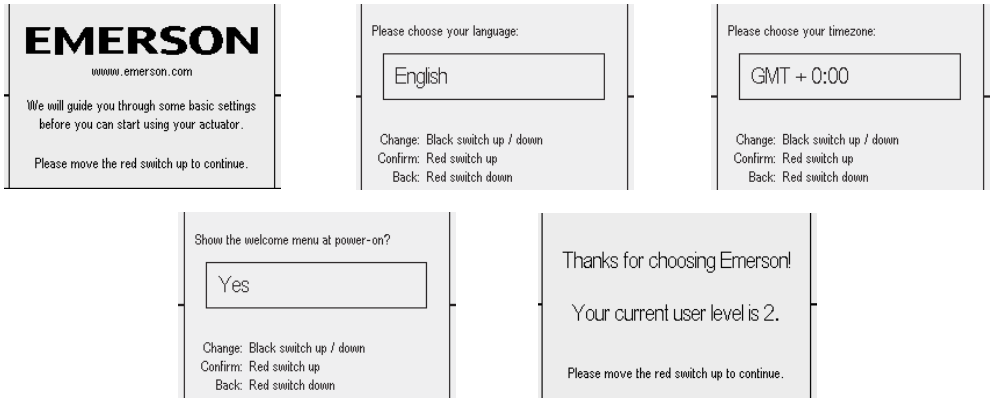

7.4.1 Operation Mode

Use the selector switch (red) to determine the various operating states of the actuator. In each of these positions, it is possible to block the switch by means of a padlock and thus protect the actuator against unauthorized access.

The selector switch has the following positions:

Table 5. Selector Positions

OFF	The actuator can be neither operated via the remote control nor via the control switches of the controller.
Local	It is possible to operate the actuator by motor via the control switch. Control via the remote inputs may be possible with appropriate configuration (superimposed control commands, emergency commands).
Remote	The actuator is ready to process control commands via input signals. The control switch for the motor operation of the actuator is not enabled.

Besides defining the operational status, the selector switch is used in configuration mode to confirm or cancel parameter inputs.

Depending on the selector switch position, the control switch performs different functions.

Table 6. Control Switch Positions

Selector switch in the OFF position	The control switch is used to scroll up or down the menu according to internal symbolism. From the neutral position towards ⊕ you reach the status and history data areas. Towards the ⊖ symbols you reach the parameter menu. Here, the selection switch either confirms ✓ or rejects ✗ the current input according to associated symbolism.
Selector switch in the REMOTE position	The control switch gives you access to status, history data and parameter area.
Selector switch in the LOCAL position	With the control switch, the actuator can be operated by motor. You may also operate the actuator in inching and self-hold mode. Switches are spring-loaded to snap back automatically into their neutral position. (To confirm a control command, the control switch must be pushed all the way into its mechanical locking position).

7.4.2 Configuration

In principle, all parameters are shown as numbers in the corresponding parameter point. From the actuator menu, use the control switch to access different menu points. The lower left corner of the display shows the “EDIT?” option.

NOTE:

Please make sure, that the set user level has permission to read/write the parameters.

Figure 43. Display (11)

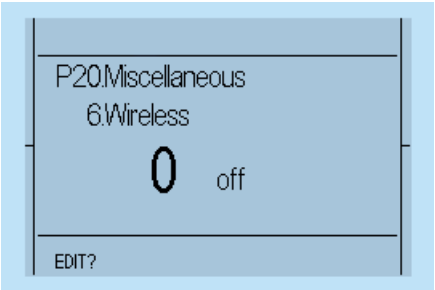

Confirm the selector switch with a slight flip towards ✓ , (see Figure 25 to Figure 27) to change the selected parameter. To confirm this input readiness, the display changes from “EDIT?” to “SAVE?”.

Figure 44. Display (12)

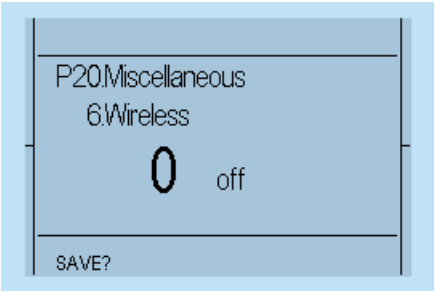

Use the control switch towards to the characters to change the parameter ⊕ or ⊖ (see Figure 38 to Figure 41). After reaching the desired parameter value, confirm the value with the selector switch again, flip it slightly towards ✓, (see Figure 25 to Figure 27).

7.4.3 Configuration Example

By way of example, we will change parameter P20.6 (wireless) from 0 (wireless off) to 2 (Bluetooth communication on). Thus, the Bluetooth connection is activated for a short time and then deactivated again automatically.

Step 1 - The operating and control switch must be in the neutral position.

Figure 45. Selector/Control Switch (2)

Parts Overview:

1. Selector Switch (red)
2. Control Switch (black)

Step 2 - Now, move the control switch down (towards) until the menu item P20.6 Miscellaneous Wireless is displayed.

Figure 46. Control Switch Flipped Down

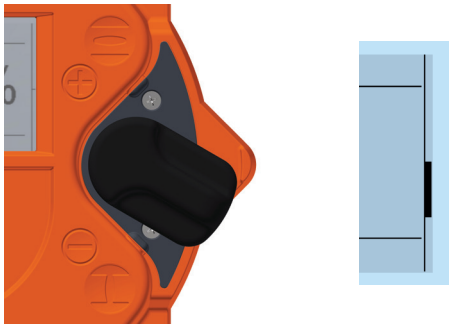

Figure 47. Display (13)

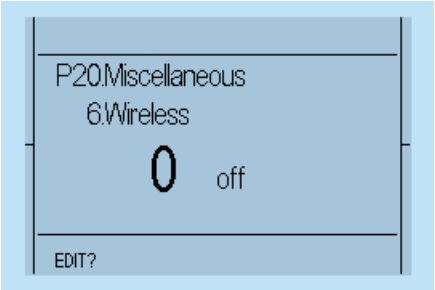

Step 3 - Afterwards, flip up slightly the selector switch (towards) and let it snap back to its neutral position.

Figure 48. Selector Switch in Neutral Position (7)

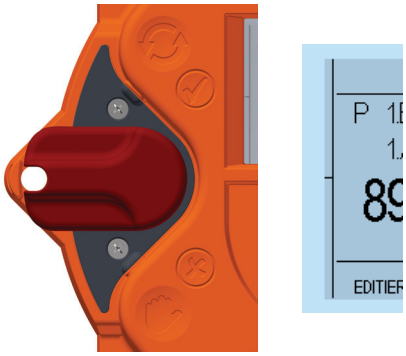

Figure 49. Selector Switch Flipped Up (3)

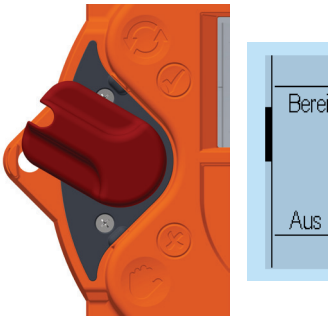

Figure 50. Selector Switch in Neutral Position (8)

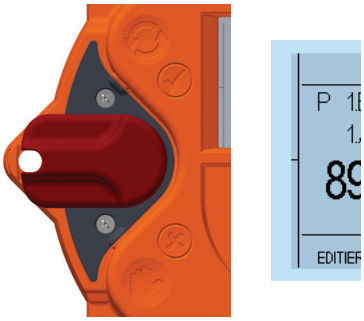

Step 4 - This changes the bottom line of the display from “EDIT?” to “SAVE?”.

Figure 51. Display (14)

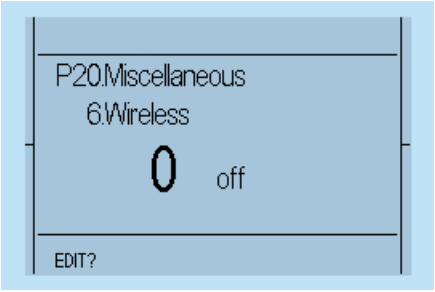

Figure 52. Display (15)

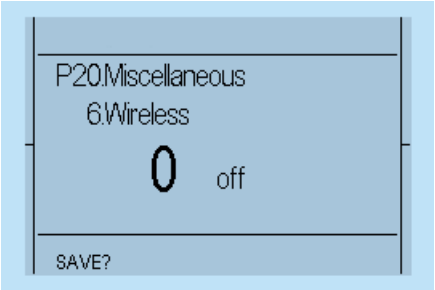

Step 5 - Flip up the control switch (towards) to change the value from 0 (off) to 2 (Bluetooth).

Figure 53. Control Switch Flipped Up

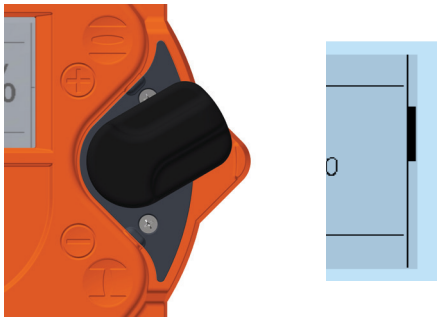

Figure 54. Display (16)

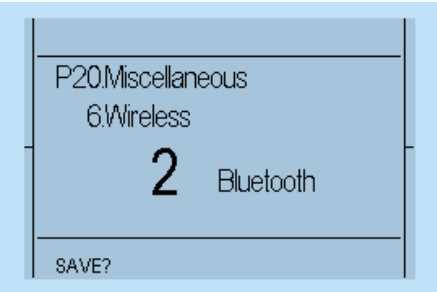

Step 6 - If the value changes to 1, confirm the selection by flipping halfway up the selector switch (towards) and letting it snap back to its neutral position (see Figure 48 to Figure 50).

Figure 55. Selector Switch Flipped Halfway Up

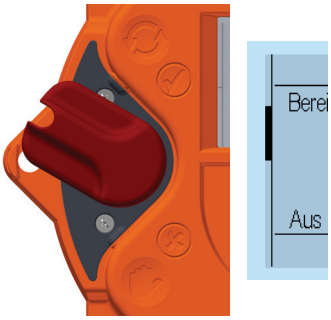

Figure 56. Display (17)

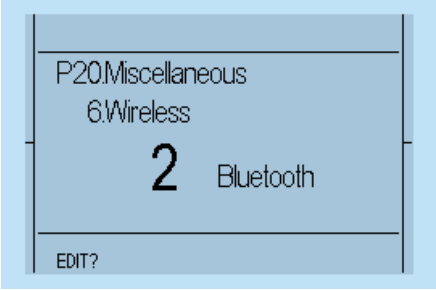

This changes the bottom line of the display from “SAVE?” to “EDIT?” and the parameter is stored.

7.4.4 "TEACHIN"

Furthermore, certain parameters (end positions, intermediate positions) can be set using "TEACHIN". Thus, their configuration is greatly simplified.

After selecting the appropriate menu item (for example: End position) and changing the input type from "EDIT?" to "SAVE?", move the selector switch (red) to manual mode and lock it into place. As you do so, the display will show the message "TEACHIN" and the current position value will be applied continuously to the parameter value. In this mode, further to manual operation by handwheel, the actuator can be motor-driven with the control switch to the desired position (see Section 6.5).

Figure 57. Display (18)

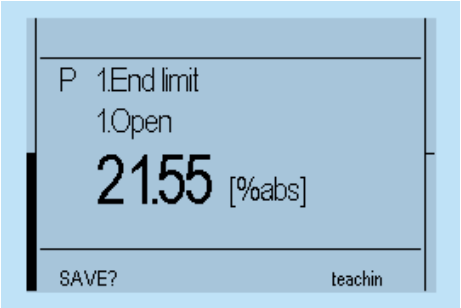

⚠ CAUTION

Please note that, during motor operation, only torque monitoring remains active, as travel adjustment will happen subsequently. Therefore, please check beforehand whether the maximum torque has been already set.

After reaching the desired, to-be-defined position, move the selector switch back to the neutral position. Finally, the parameter value must still be saved by flipping the selector switch halfway up and letting it snap back to the neutral position (see Figure 48 to Figure 50).

Section 8: Parameter Menu

For each parameter group, you can find a description, tabular overview of the menu items and possible configurations.

The parameter list below also includes all possible options per menu item. Please note that some of the menu items listed and described may not be delivered with your configuration.

8.1 Parameter Group: End Limit

These parameters are used to configure the end position and switch off behavior of the actuator. In this regard, it is important to ensure that the basic mechanical configuration described in Section 6.5 has already been made.

⚠ CAUTION

Ensure that these parameters are set during commissioning before operating the actuator. In addition, the settings in the "Torque" menu (see Section 8.2) must be compared with the permissible values of the valve and corrected as appropriate).

⚠ CAUTION

Generally, 100% stands for fully open and 0% for fully closed. Please note that these values cannot be changed. The end position range is reached as soon as 0% or 100% is shown on display.

Table 7. End Limit Parameter Group (1)

	Menu Item	Sub Menu Item	Position Setting	Notes/Comments
P1.1	End limit	Open	TEACHIN; 0 to 100U[1]	The parameter value can be set using TEACHIN. With a known travel, the second end position can be entered after setting the first end position.
P1.2	End limit	Close	TEACHIN; 0 to 100U[1]	The parameter value can be set using TEACHIN. With a known travel, the second end position can be entered after setting the first end position.
P1.3	End limit	Switch off Open	by travel (0)	The actuator uses end-position signals to switch off and report the end position. Attention: For fail-safe-actuators in fail-safe direction not applicable. End limit by travel in fail-safe position only possible by changing the mechanical connection to the valve.
			by torque (1)	The actuator signals the end position or stops the motor only after reaching the specified torque in the end position. If the torque is reached and end position signal is not, the actuator reports an error. If the end position is reached and the control command drops off during the build-up of the torque, the motor stops and the required torque is not reached. Attention: For fail-safe actuators in fail-safe direction not applicable. Torque/Force in fail-safe position depends on residual spring torque/force.

NOTE:
[1] Representative for CM32; U - number of revolutions

Table 8. End Limit Parameter Group (2)

	Menu Item	Sub Menu Item	Position Setting	Notes/Comments
P1.3	End limit	Switch off Open	by torque1 (2)	Similar as "torque", but in the end position range, the torque is also increased when the control command drops off during the build-up of the torque, until the required torque is reached. Attention: For fail-safe actuators in fail-safe direction not applicable. Torque/Force in fail-safe position depends on residual spring torque/force.
			by torque2 (3)	Similar as "torque1", but in the end position range automatically an additional control command is generated to reach and hold the torque. If the torque decrease and the actuator is in the end position it will be restored automatically. e.g.: Changes due to temperature differences, settlement. Attention: For fail-safe actuators in fail-safe direction not applicable. Torque/Force in fail-safe position depends on residual spring torque/force.
			by travel1 (4)	Similar as "travel", however, the actuator still continues to drive the set Overrun time after reaching the end position, even when the positioning command is released. Only relevant if Overrun time (P1.10, P1.11) is greater than 0. Attention: For fail-safe actuators in fail-safe direction not applicable.
P1.4	End limit	Switch off Close	by travel (1)	See P1.3
			by torque (1)	See P1.3
			by torque1 (2)	See P1.3
			by torque2 (3)	See P1.3
			by travel1 (4)	See P1.3
P1.5	End limit	Closing direction	right (0)	Actuator is designed for clockwise = closing.
			left (1)	Reverse direction of rotation. Counterclockwise = closing. The crossing of all signals and commands is performed by the controller.
P1.6	End limit	Rotation sense Position	0	Rotation sense of the Potentiometer. No function in Bettis RTS CM series.
			1	
P1.7	End limit	LED function	Close=green (0)	Definition of the LED color of the CLOSED or OPEN end position signalization.
			Close=red (1)	
			Close = green, yellow inv. (2)	Definition of the LED color of the CLOSED or OPEN end position signalization. Yellow LEDs (1 and 2) are inverted.
			Close = red, yellow inv. (3)	
P1.8	End limit	End limit Hysteresis	0.1 to 10.0%	Hysteresis range for end position signals: Example: End position hysteresis 1% means, that the End position OFF is reached when closing 0%, and will leave it when opening only at 1%, i.e., a re-closing can only take place after leaving this hysteresis.
P1.9	End limit	Ramp	0.1 to 100%	When approaching the end position, the speed is reduced.
P1.10	End limit	Range	0 to 100%	End position range for torque (P1.3, P1.4). Permissible range in which the torque is to be achieved. If the actuator comes to the end of the end position range, the motor shuts off even if the torque has not been reached.
P1.11	End limit	Overrun Open	0 to 60 seconds	Switch off delay after reaching the end position, see travel1 (P1.3, P1.4)
P1.12	End limit	Overrun Close	0 to 60 seconds	Switch off delay after reaching the end position, see travel1 (P1.3, P1.4)

NOTE:
(1) Representative for CM32; U - number of revolutions

⚠ CAUTION

When installing the actuator on a gear or a thrust unit, please take into account the limits and factors of the gear/thrust unit at parametrization.

⚠ CAUTION

When using end limit switch off by torque, the end position limit must be set before reaching the torque limit. Accordingly, the actuator will only signal the final end position if the configured torque and the associated end position are reached. If the end position is not reached, a torque error is reported (see Section 7.2.2).

8.2 Parameter Group: Torque

If no torque was specified with the order, the actuator is supplied from the factory with the maximum configurable torque.

Table 9. Torque Parameter Group

	Menu Item	Sub Menu Item	Position Setting	Notes/Comments
P2.1	Torque	Open	8 to 32 Nm[2]	Switch off torque in OPEN direction CAUTION: The range can be restricted via menu item P2.3.
P2.2	Torque	Close	8 to 32 Nm[2]	As P2.1, but in CLOSED direction.

NOTE:
[2] Representative for CM32

⚠ CAUTION

When installing the actuator on an additional gear, please take into account the corresponding values of the gear/thrust unit as you enter the actuator parameters. To achieve an effective output torque (including gear)/output power (including thrust unit) ratio, the factor gear/thrust unit must be considered.

8.3 Parameter Group: Speed

Table 10. Speed Parameter Group

	Menu Item	Sub Menu Item	Position Setting	Notes/Comments
P4.1	Speed	Local Open	1.0 to 72.2 RPM	Output speed for local operation in direction OPEN
P4.2	Speed	Local Close	1.0 to 72.2 RPM	As P4.1, but in direction CLOSE
P4.3	Speed	Remote Open	1.0 to 72.2 RPM	Output speed for remote operation in direction OPEN
P4.4	Speed	Remote Close	1.0 to 72.2 RPM	As P4.3, but in direction CLOSE
P4.5	Speed	Emergency Open	1.0 to 72.2 RPM	Output speed for emergency operation in direction OPEN
P4.6	Speed	Emergency Close	1.0 to 72.2 RPM	As P4.5, but in direction CLOSE
P4.7	Speed	Torque-dependent	1.0 to 72.2 RPM	Seal-tight speed. Speed at which the actuator runs near the end position at torque-dependent switch off (see P1.3 and P1.4)
P4.8	Speed	Minimum	1.0 to 72.2 RPM	Minimum speed

⚠ CAUTION

The maximum speed for the 24 V DC actuator version is reduced to 20 RPM.

8.4 Parameter Group: Ramp (Optional)

The start ramp can be set separately for each operation mode. Thus, a 100% start ramp means that the motor attains its maximum speed in about a second. Higher speeds (see Section 8.3) lead to shorter runtimes. If the ramp is set below 100%, the starting time increases in an inversely proportional fashion.

Table 11. Ramp parameter group

	Menu Item	Sub Menu Item	Position Setting	Notes/Comments
P5.1	Ramp	Local	1 to 100%	Start ramp for local operation
P5.2	Ramp	Remote	1 to 100%	Start ramp for remote operation
P5.3	Ramp	Emergency	1 to 100%	Start ramp for emergency operation

8.5 Parameter Group: Control

Table 12. Control Parameter Group

	Menu Item	Sub Menu Item	Position Setting	Notes/Comments
P6.2	Control	Ready delay	0 to 10 seconds	Drop-out delay for the ready signal (Binary outputs).
P6.5	Control	24 V output	0	24 V auxiliary output is deactivated (Section 17.5). The function of the auxiliary input is still activated.
			{1}	24 V auxiliary output is activated (Section 17.5).
P6.6	Control	Minimum impulse	0.1 to 2.0 seconds	Minimum switch-on time of the motor.
P6.17	Control	Remote Display	0: Off	The remote display is deactivated.
			1: Menu	Access to parameter menu is possible on the remote display. Motor is deactivated on the remote display, i.e., LOCAL and REMOTE operating modes are handled by the main display.
			2: Menu/Control	Access to parameter menu and control are possible on the remote display and the main display. In case of a communication loss with the remote display, the actuator will be in operating mode OFF.
			2: Menu/Control (Fallback)	Access to parameter menu and control are possible on the remote display and the main display. In case of a communication loss with the remote display, the actuator will fall back to the set operating mode on the main display.

8.6 Parameter Group: User Level

From the Display firmware version 1600 and upward, the parameter group no. 7 allows to set the default user levels accessed locally or via bus.

The user levels allow access restrictions to certain parameters. Depending on the user level read/write setting per parameter, the menu items can only be seen or edited, if the current user level is equal or higher than the required user level. Parameters are assigned default user levels. These may be changed with the SmartTool2, if the set user level in the SmartTool2 is equal or higher than the current user level-setting of the parameter (-group).

Figure 58. Actuator Parameters on the SmartTool2

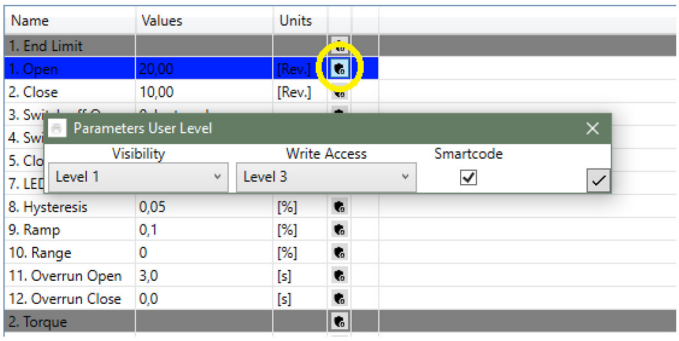

Parameter user level can be set by clicking the button as marked on the Figure 58.

Table 13 shows the default passwords for the user levels:

Table 13. Default Passwords for User Levels

User Level	Password Local	Password Wireless
1	LLVL1	WLVL1
2	LLVL2	WLVL2
3	LLVL3	WLVL3
4	LLVL4	WLVL4

The default passwords can be changed with the SmartTool2 (Adjust Wizard - Access tab, see Figure 59) or directly on the actuator control unit ("P7.3 - Change Password").

NOTE:

Editing the parameter "P7.4 - Change Password" will change the password for the current user level.

Figure 59. Smarttool2 Adjust Wizard - Access Tab

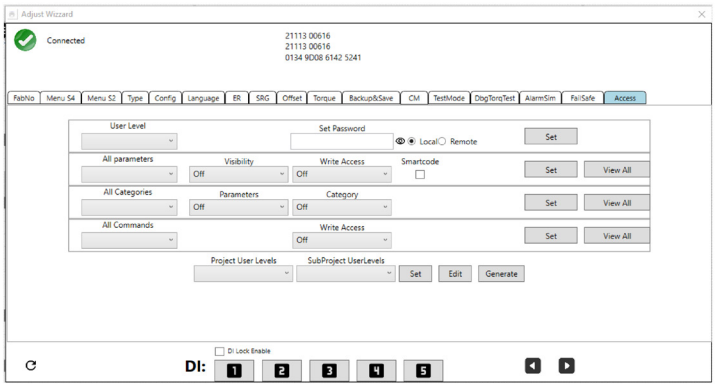

Table 14. User Level Parameter Group

	Menu Item	Sub Menu Item	Position Setting	Notes/Comments
P7.1	User Level	Local	0 to 6	Sets the default user level on the RTS CM control unit. The set user level will revert back to this user level, if the user level was changed with menu item "U - User level" after 3 minutes of inactivity or upon restarting the actuator, password will be prompted, if the set user level is higher than the currently active user level.
P7.2	User Level	Bus	0 to 6	Sets the user level on access via Bus.
P7.3	User Level	Remote Display	0 to 6	Sets the user level on the remote display.
P7.4	User Level	Change Password	6-digit	Changes the password of the current active user level.

NOTE:

The parameters have preset user level settings. The tables in Section 8.19 shows an overview of the default user level settings for all parameters.

8.7 Parameter Group: Position

In addition to OPEN and CLOSED end positions, you may define intermediate positions. These can be used as feedback signals for the binary outputs or as target value for fix position approach.

⚠ CAUTION

If you change the end positions (see Section 8.1), intermediate positions are retained percentage-wise, i.e., the absolute positions of the intermediate positions change.

Table 15. Position Parameter Group

	Menu Item	Sub Menu Item	Position Setting	Notes/Comments
P8.1	Position	Intermediate Position 1	TEACHIN 0 to 100%	Position value of intermediate position 1.
P8.2	Position	Intermediate Position 2	TEACHIN 0 to 100%	See above
P8.3	Position	Intermediate Position 3	TEACHIN 0 to 100%	See above
P8.4	Position	Intermediate Position 4	TEACHIN 0 to 100%	See above
P8.5	Position	Emergency Position	TEACHIN 0 to 100%	Position value of the emergency position.
P8.6	Position	Hysteresis	0.1 to 10%	Hysteresis range of intermediate positions. Within this hysteresis, no repositioning occurs upon reaching the intermediate positions (option: fix position approach). Furthermore, the output functions for position = intermediate position are active within this range (see P10.1).
P8.7	Position	Intermediate Position 5	TEACHIN 0 to 100%	See above
P8.8	Position	Intermediate Position 6	TEACHIN 0 to 100%	See above
P8.9	Position	Intermediate Position 7	TEACHIN 0 to 100%	See above
P8.10	Position	Intermediate Position 8	TEACHIN 0 to 100%	See above
P8.11	Position	Dead Band	0.1 to 10%	Tolerance range for the position deviation (intermediate position - actual position), where no adjustment occurs. The deadband should not be set too low, to prevent actuator oscillation.
P8.12	Position	Gain	0.1 to 100%	The gain (gradient) affects the positioning to the target intermediate position. The smaller the gain selected (e.g. 20%), the earlier the actuator starts reducing its speed in case of speed variable actuators on approaching the target position. This leads to better positioning (smaller reachable deadband). A 100% setting disables this gradient.
P8.13	Position	Hysteresis	0.1 to 100%	This hysteresis value applies to the set value in “P8.11 - Deadband”.
P8.14	Position	Intermediate Position 9	TEACHIN 0 to 100%	See above
P8.15	Position	Intermediate Position 10	TEACHIN 0 to 100%	See above
P8.16	Position	Intermediate Position 11	TEACHIN 0 to 100%	See above
P8.17	Position	Intermediate Position 12	TEACHIN 0 to 100%	See above
P8.18	Position	Intermediate Position 13	TEACHIN 0 to 100%	See above
P8.19	Position	Intermediate Position 14	TEACHIN 0 to 100%	See above
P8.20	Position	Intermediate Position 15	TEACHIN 0 to 100%	See above
P8.21	Position	Intermediate Position 16	TEACHIN 0 to 100%	See above

Figure 60. Function Principle of the Deadband And Hysteresis in Conjunction with Intermediate Positions

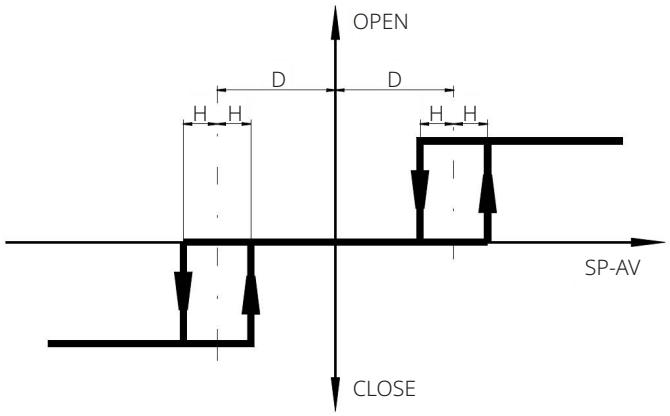

Figure 60 shows the working principle of the parameters “P8.11 - Deadband” and “P8.13 - Hysteresis”. The set dead band thresholds are added and subtracted from the intermediate positions. The hysteresis sets the threshold on the deadband thresholds. E.g. if the intermediate position is 50%, dead band is 1% and hysteresis is 50%, the dead band thresholds will be at 49% and 51%. On top of that, the hysteresis for the 49% threshold will be at 50% of the dead band value, which is ±0.5%; thus the hysteresis on the 49% dead band threshold is at 48.5% and 49.5%. The actuator will move toward 50%, if the actual position is below 48.5% and stop, if the actual position is between 49.5% and the “outer” hysteresis mirrored on the ordinate, which is 51.5% in this case.

NOTE:
Please be aware that a 100% setting for hysteresis will cause oscillation due to overlapping thresholds.

8.8 Parameter Group: Binary Inputs

The controller is equipped with 5 freely configurable binary inputs. Please find further information on technical data of the binary inputs in Section 18.2, Binary inputs are also effective during actuator control via Profibus (option).

Default binary inputs are as follows:

- Input 1: OPEN
- Input 2: CLOSED
- Input 3: STOP
- Input 4: EMERGENCY OPEN
- Input 5: EMERGENCY CLOSED

Table 16. Binary Inputs Parameter Group (1)

	Menu Item	Sub Menu Item	Position Setting	Notes/Comments
P9.1	Binary Input	Input 1	-1: Not activated	This input is not active, i.e., it is not shown in the status "S2 - Binary Inputs".
			0: no function	This input has no function.
			1: Open	OPEN command in REMOTE mode (selector switch in position REMOTE).
			2: Closed	CLOSED command in REMOTE mode (selector switch in position REMOTE).
			3: Stop	STOP command in REMOTE mode (selector switch in position REMOTE).
			4: Open Self-hold	Self-hold for OPEN, i.e., a short pulse is sufficient and the actuator moves then into the end position. Use the STOP command to stop the actuator.
			5: Closed Self-hold	Self-hold for CLOSED, see OPEN SELF-HOLD.
			6: Emergency Open	Superimposed run command; run the actuator in direction OPEN regardless of whether the selection switch is set to REMOTE or LOCAL operation.
			7: Emergency Closed	Superimposed run command; run the actuator in direction CLOSED regardless of whether the selection switch is set to REMOTE or LOCAL.
			8: Release	The actuator may be operated only with a switched signal. Both in local and remote operation.
			9: Open/Closed	The actuator moves towards OPEN if input is active and towards CLOSED otherwise.
			10: Close/Open	The actuator moves towards CLOSED if input is active and towards OPEN otherwise.
			11: Positioner	Release of the positioner
			12: Open inv.	As open but active low
			13: Close inv.	As CLOSED but active low
			14: Stop inv.	As STOP but active low
			15: Open Self-Hold inv.	As Open Self-Hold but active low
			16: Closed Self-Hold inv	As Closed Self-Hold but active low
			17: Emergency-Open inv.	As Emergency-Open but active low
			18: Emergency-Closed inv.	As Emergency-Closed but active low
			19: Block	With activated (switched) signal, the actuator is locked for operation also in local mode
			20: Controller lock	Positioner lock
			21: Release Local	The actuator may be operated only with a switched signal.
			22: Block Local	As Release Local but active low.
			23: Lock Open	Trigger lock OPEN (in LOCAL and REMOTE mode). Actuator moves with the highest priority to OPEN; command continues internally active after reaching the end position OPEN. Dropping only with LOCK OFF, Supply OFF or operating mode OFF.
			24: Lock Closed	Trigger lock CLOSED (in LOCAL and REMOTE mode). Actuator moves with the highest priority to CLOSED; command continues internally active after reaching the end position CLOSED. Dropping only with LOCK OFF, Supply OFF or operating mode OFF.
			25: Lock Off	Drop the lock
			26: Fail-safe	Trigger the fail-safe function in all operating modes (only functional in Fail-safe actuators).
			27: Fail-safe inv.	As fail-safe, but active low.
			28: Lock Open inv.	As Lock Open, but active low.
			29: Lock Closed inv.	As Lock Closed, but active low.
			30: Lock Off inv.	As Lock Off, but active low.

Table 17. Binary Inputs Parameter Group (2)

	Menu Item	Sub Menu Item	Position Setting	Notes/Comments
P9.1	Binary Input	Input 1	31: Intermediate position 1	Approach intermediate position 1 (P8.1) in REMOTE mode (fix position approach). There is no repositioning upon reaching the intermediate position within the hysteresis (see P8.6). Higher priority than intermediate positions 2, 3 and 4
			32: Intermediate position 2	As intermediate position 1, but with higher priority than intermediate positions 3 and 4
			33: Intermediate position 3	As intermediate position 1, but with higher priority than intermediate position 4
			34: Intermediate position 4	As intermediate position 1, but with lowest priority
			35: Emergency position	Approach emergency position (P8.5). As intermediate position 1, but with higher priority than intermediate positions 1, 2
			36: Intermediate position 1 inv.	As Intermediate position 1, but active low
			37: Intermediate position 2 inv.	As Intermediate position 2, but active low
			38: Intermediate position 3 inv.	As Intermediate position 3, but active low
			39: Intermediate position 4 inv.	As Intermediate position 4, but active low
			40: Emergency position inv.	As Emergency position, but active low
			41: Travel Open	Reserved for future use
			42: Travel Close	Reserved for future use
			43: Travel Open inv.	Reserved for future use
			44: Travel Close inv.	Reserved for future use
			45: Fail-safe lock	Reserved for future use (only for Fail-safe actuators)
			46: Fail-safe lock inv.	Reserved for future use (only for Fail-safe actuators)
			47: Intermediate Position Bit0	Intermediate Position Bit0 to Intermediate Position Bit3 allow to signal intermediate positions 1 to 16 through a bit pattern (binary to decimal; decimal value + 1 corresponds to the Intermediate Position). Bit3 is the MSB. e.g. to move to Intermediate Position 1, all Bits should be 0; to move to Intermediate Position 3, Bit 1 should be 1
			48: Intermediate Position Bit1	See 47: Intermediate Position Bit0
			49: Intermediate Position Bit2	See 47: Intermediate Position Bit0
			50: Intermediate Position Bit0 inv.	As 47: Intermediate Position Bit0 but active low
			51: Intermediate Position Bit1 inv.	See 50: Intermediate Position Bit0 inv.
			52: Intermediate Position Bit2 inv.	See 50: Intermediate Position Bit0 inv.
			53: PVST Start	Start PVST (optional, see PVST section)
			54: PVST Start inv.	As 53: PVST Start, but active low.
			55: Intermediate Position Bit3	See 47: Intermediate Position Bit0
			56: Intermediate Position Bit3 inv.	See 50: Intermediate Position Bit0 inv.
P9.2	Binary Input	Input 2	See Input 1	-
P9.3	Binary Input	Input 3	See Input 1	-
P9.4	Binary Input	Input 4	See Input 1	-
P9.5	Binary Input	Input 5	See Input 1	-

NOTE:
For optional functions such as a relay board or virtual inputs, please refer to the corresponding IOM.

8.9 Parameter Group: Binary Outputs

The controller is equipped with 8 freely configurable binary outputs. Please find further information on technical data of the binary outputs in Section 18.1. Provided with external supply, binary outputs are optically isolated from the rest of the controller.

Default binary outputs are as follows:

- Output 1: Ready
- Output 2: End position OPEN
- Output 3: End position CLOSED
- Output 4: Run OPEN
- Output 5: Run CLOSED
- Output 6: Torque
- Output 7: LOCAL
- Output 8: REMOTE

Table 18. Binary Outputs Parameter Group (1)

	Menu Item	Sub Menu Item	Position Setting	Notes/Comments
P10.1	Binary Output	Output 1	0: No Function	The output has no function
			1: Ready	Actuator is ready
			2: Fault	General fault; actuator is not ready
			3: Open	Actuator is in open position
			4: Closed	Actuator is in closed position
			5: Running Open	Actuators runs in direction Open
			6: Running Closed	Actuators runs in direction Closed
			7: Running	Actuator is running in either Open or Closed
			8: Torque Open	Switch off torque was reached in Open direction-actuator has been switched off
			9: Torque Closed	Switch off torque was reached in Closed direction-actuator has been switched off
			10: Torque	Switch off torque was reached in either Closed or Open direction
			11: Travel Open	The Open end position has been reached
			12: Travel Closed	The Closed end position has been reached
			13: Position > Intermediate 1	Position > Intermediate position 1
			14: Position < Intermediate 1	Position < Intermediate position 1
			15: Position > Intermediate 2	Position > Intermediate position 2
			16: Position < Intermediate 2	Position < Intermediate position 2
			17: Position > Intermediate 3	Position > Intermediate position 3
			18: Position < Intermediate 3	Position < Intermediate position 3
			19: Position > Intermediate 4	Position > Intermediate position 4
			20: Position < Intermediate 4	Position < Intermediate position 4
			21: Local	Local operating mode (selector switch in position)

Table 19. Binary Outputs Parameter Group (2)

	Menu Item	Sub Menu Item	Position Setting	Notes/Comments
P10.1	Binary Output	Output 1	22: Remote	Remote operating mode (selector switch in position remote)
			23: Off	Off operating mode (selector switch in the Off position)
			24: Motor temperature Warning	The motor temperature is above the warning threshold
			25: Motor temperature Switch off	The motor temperature is above the motor switch off threshold
			26: Always	Signal is always on
			27: Never	Signal is always off
			28: Binary Input 1	Forwarding of binary input to output
			29: Binary Input 2	Forwarding of binary input to output
			30: Binary Input 3	Forwarding of binary input to output
			31: Binary Input 4	Forwarding of binary input to output
			32: Binary Input 5	Forwarding of binary input to output
			33: Torque Open masked	As Torque OPEN although it will suppress (mask) this signal in the end position upon torque-dependent switch off
			34: Torque Closed masked	As Torque CLOSED although it will suppress (mask) this signal in the end position upon torque-dependent switch off
			35: Ready Remote	Ready and Remote operating mode
			36: Ready Local	Ready and Local operating mode
			37: Ready Local/Remote	Ready and Local or Remote mode
			38: Lock Open	Lock OPEN is enabled. OPEN command is internally queued with the highest priority and will not be dropped even in the end position
			39: Lock Closed	Lock CLOSED is enabled. CLOSED command is internally queued with the highest priority and will not be dropped even in the end position
			40: Fail-safe OK 1	Fail-safe OK (only for fail-safe actuators)
			41: Fail-safe OK 2	Fail-safe OK and Ready (only for fail-safe actuators)
			42: Fail-safe OK 3	Fail-safe OK, Ready and Remote (only for fail-safe actuators)
			43: Lock	Lock Open or Lock Closed is enabled
			44: Ready/Torque OK	Actuator is ready and no torque switch off
			45: Ready/Remote/Torque OK	Actuator is ready for operation in REMOTE mode and no torque switch off
			46: Position= Intermediate 1	Position = Intermediate position 1. The width of the interval is set with the parameter P8.6
P10.1	Binary Output	Output 1	47: Position=Intermediate 2	Position = Intermediate position 2. The width of the interval is set with the parameter P8.6
			48: Position=Intermediate 3	Position = Intermediate position 3. The width of the interval is set with the parameter P8.6
			49: Position=Intermediate 4	Position = Intermediate position 4. The width of the interval is set with the parameter P8.6
			50: Position=Emergency Position	Position = emergency position. The width of the interval is set with the parameter P8.6
			51: Bus Bit 1	In existing bus interface (hardware option) the output is set according to the selected bit bus.
			52: Bus Bit 2	
			53: Bus Bit 3	
			54: Bus Bit 4	
			55: Bus Bit 5	
			56: Bus Bit 6	
			57: Bus Bit 7	
			58: Bus Bit 8	

Table 20. Binary Outputs Parameter Group (3)

	Menu Item	Sub Menu Item	Position Setting	Notes/Comments
P10.1	Binary Output	Output 1	59: Virtual 1	Configurable output function
			60: Virtual 2	
			61: Virtual 3	
			62: Virtual 4	
			63: Line voltage OK	Supply voltage for the motor is OK
			64: Control voltage OK	The auxiliary voltage for the RTS control is OK. This function is only available if the auxiliary voltage output is not switched on (P6.5 to 0).
			65: PVST OK	The PVST was successful.
			66: PVST Failure	The PVST was not successful.
			67: PVST Active	A PVST was triggered. The actuator is running a PVST.
			68: Emergency OPEN	Emergency OPEN command is active. The signal remains active, as long as the emergency command is active, even if the end limit is reached.
			69: Emergency CLOSE	Emergency CLOSE command is active. The signal remains active, as long as the emergency command is active, even if the end limit is reached.
			70: Analog Input 1 Fault	There is no or a faulty signal on the analog input 1.
			71: Analog Input 2 Fault	There is no or a faulty signal on the analog input 2.
			72: Phase Sequence Fault	Cause on basis: Active phase sequence detection on single phase actuators, loss of main power while connected to external 24 V DC auxiliary voltage, or loss of phase 2.
			73: Power Supply Fault	No power supply to the power electronics (when the controller is powered from the auxiliary power input). Defect of power electronics.
			74: Inverter Fault	The inverter is defective or the wiring is faulty (Only for CM.V1.2 actuator series).
			75: Manual Override	Manual override is active (For Fail-Safe-Actuators); see the Fail-Safe section for more information about the manual override.
			76: Travel Sensor Fault	The travel sensor is not calibrated for CM actuators.
			77: Torque Sensor Fault	Potentiometer fault on Basis, or cable is broken.
			78: Bus Fault	No communication with the optional bus.
			79: Bus Watchdog	Watchdog for bus communication has reacted.
			80: Undervoltage Warning	The input voltage is below the regular voltage range, but motor operation is still possible.
			81: Battery Low	Battery on display board is empty, loss of time/date or counter values possible.
			83: Undervoltage Fault	The input voltage is too low, The motor is switched off, until the input voltage is in the regular voltage range.
			84: Undervoltage Switch off	The input voltage dropped below the lower threshold multiple times. The motor is turned off for 5 minutes. This error can be acknowledged by switching the selector switch to OFF or by turning the actuator off and on.
			85: Overvoltage Warning	The input voltage is over the regular voltage range, but motor operation is still possible.
			86: Internal Fault	Internal communication error between electrical components, i.e. Internal Communication E error, or Internal Communication L error or Internal Communication D error.
			87: Torque Masked	Is set, if 33: Torque Open Mask or 34: Torque Close Mask is set.
P10.2	Binary Output	Output configuration 1	0: Normal	Output 1 is set to normal, i.e. if the condition in point P10.1 is met, Output 1 is set to HIGH (active HIGH).
			1: Inverted	If the condition in point P10.1 is met, Output 1 is set to LOW (active LOW).
			2: Normal flashing	If the condition in point P10.1 is met, Output 1 starts blinking (active HIGH).
			3: Inv. flashing	If the condition in point P10.1 is not met, Output 1 starts blinking (otherwise it is set to HIGH).

Table 21. Binary Outputs Parameter Group (4)

	Menu Item	Sub Menu Item	Position Setting	Notes/Comments
P10.3	Binary Output	Output 2	See Output 1	-
P10.4	Binary Output	Output 2 configuration	See Output 1 configuration	-
P10.5	Binary Output	Output 3	See Output 1	-
P10.6	Binary Output	Output 2 configuration	See Output 1 configuration	-
P10.7	Binary Output	Output 4	See Output 1	-
P10.8	Binary Output	Output 4 configuration	See Output 1 configuration	-
P10.9	Binary Output	Output 5	See Output 1	-
P10.10	Binary Output	Output 5 configuration	See Output 1 configuration	-
P10.11	Binary Output	Output 6	See Output 1	-
P10.12	Binary Output	Output 6 configuration	See Output 1 configuration	-
P10.13	Binary Output	Output 7	See Output 1	-
P10.14	Binary Output	Output 7 configuration	See Output 1 configuration	-
P10.15	Binary Output	Output 8	See Output 1	-
P10.16	Binary Output	Output 8 configuration	See Output 1 configuration	-

⚠ CAUTION

When using the point torque-dependent OPEN or torque-dependent CLOSED (see Section 8.1, items P1.3 and P1.4) the actuator will only be open or closed when the set torque and the associated end position is reached. If the end position is not reached, a torque error is reported (see Section 7.2.2).

NOTE:

For optional functions such as a relay board or virtual outputs, please refer to the corresponding Installation, Operation and Maintenance Manual.

8.10 Parameter Group: Position Output (Optional)

Position output is used to indicate the current position of the actuator using 0/4 to 20 mA; it can be retrofitted using a software code.

If this option is not enabled, the menu point shows the message “inactive”.

No adjustment to the end positions or the travel is required. Adjustment is automatically performed during the configuration of travel limit positions (see Section 8.1).

No further settings are necessary for torque-dependent switch off, because the controller exclusively uses travel limit positions for the calculation. Regardless of whether this is defined by the torque or the travel limit positions.

The factory default setting is:

- 4 mA at 0% position
- 20 mA at 100% position

Table 22. Position Output Parameter Group

	Menu Item	Sub Menu Item	Position Setting	Notes/Comments
P11.1	Position Output	Function 1	0: off	mA output disabled
			1: Position	mA output corresponds to the actual position value.
			2: Position Valve characteristic	mA output corresponds to the actual position value taking into account the valve characteristic.
			3: Torque 1	mA output corresponds to the actual torque value.
				torque = 100% Close: mA output = start
				torque = 0%: mA output = center
				torque = 100% Open: mA output = end
			4: Torque 2	mA output corresponds to the actual torque value
				torque = 100% Close: mA output = end
				torque = 0%: mA output = start
				torque = 100% Open: mA output = end
			5: Torque 3	mA output corresponds to the actual torque value.
				torque = 150% Close: mA output = start
				torque = 0%: mA output = center
				torque = 150% Open: mA output = end
			6: Torque 4	mA output corresponds to the actual torque value
				torque = 150% Close: mA output = end
				torque = 0%: mA output = start
				torque = 150% Open: mA output = end
			7: External Setpoint 1	Passes on the mA input signal on external setpoint input
			8: External Setpoint 2	Passes on the raw mA input signal on external setpoint input
P11.2	Position Output	Start 1 (at 0%)	0 to 20.5 mA (4 mA)	mA value for the Closed (0%) position
P11.3	Position Output	End 1 (at 100%)	0 to 20.5 mA (20 mA)	mA value for the On (100%) position
P11.4	Position Output	Calibration 20 mA	-10% to +10% See Output 1	Calibrating the output position during the setting of this parameter will output a 20 mA (100%) signal. Use this parameter to calibrate accurately the 20 mA output signal. (e.g., if you measure 19.8 mA at the output, just add 1% [0.2 mA to 1% of 20 mA] to the displayed value)
P11.5	Analog Output	Function 2	See Function 1	-
P11.6	Analog Output	Begin 2 (at 0%)	See Begin 1	-
P11.7	Analog Output	End 2 (at 100%)	See End 1	-
P11.8	Analog Output	Calibration 20 mA 2	See Calibration 20 mA 1	-

8.11 Parameter Group: Step Mode

Step mode operation can be used to extend the operating time in certain ranges or for the whole travel; it is available in local, remote and emergency mode.

Step mode operation can be activated individually for the directions OPEN and CLOSED.

Cycle start, cycle end, cycle duration and interval time can be set separately for both directions (see Figure 61).

Table 23. Step Mode Parameter Group

	Menu Item	Sub Menu Item	Position Setting	Notes/Comments
P12.1	Step mode function	Mode	Disabled	Step mode operation is disabled
			Enabled	Step mode operation is enabled in LOCAL, REMOTE and EMERGENCY operation
			Local only	Step mode is only enabled in LOCAL mode
			Remote only	Step mode is only enabled in REMOTE mode
			Local + Remote only	Step mode is enabled in REMOTE and LOCAL mode
P12.2	Step mode function	Start Open	0 to 100%	In OPEN direction, position in % from which the step mode operation should start
P12.3	Step mode function	End Open	0 to 100%	In OPEN direction, position in % of which the step mode operation should end
P12.4	Step mode function	Runtime Open	0.1 to 60	Runtime in OPEN direction
P12.5	Step mode function	Pause time Open	0.2 to 60	Pause time in OPEN direction
P12.6	Step mode function	Start Closed	0 to 100%	In CLOSED direction, position in % from which the step mode operation should start
P12.7	Step mode function	End Closed	0 to 100%	In CLOSED direction, position in % of which the step mode operation should end
P12.8	Step mode function	Run time Closed	0.1 to 60	Runtime in Closed direction
P12.9	Step mode function	Pause time	0.2 to 60	Pause time in Closed direction
P12.10	Step mode function	Time base	0: Seconds	Time basis for run and pause times
			1: Minutes	
P12.11	Step mode function	Speed adaptation	0	Speed adaption not activated. Normal step mode function.
			1	Speed adaption is activated. The speed is reduced according to the runtime and pause time in the step mode range. (Example: Running time 1 second and pause time 1 second results in half the speed). If the minimum speed is undershot, the actuator clocks in the converted ratio with the minimum speed. The speed adjustment is only applicable to actuators of the type CM.

Figure 61. Position Setting and Timing

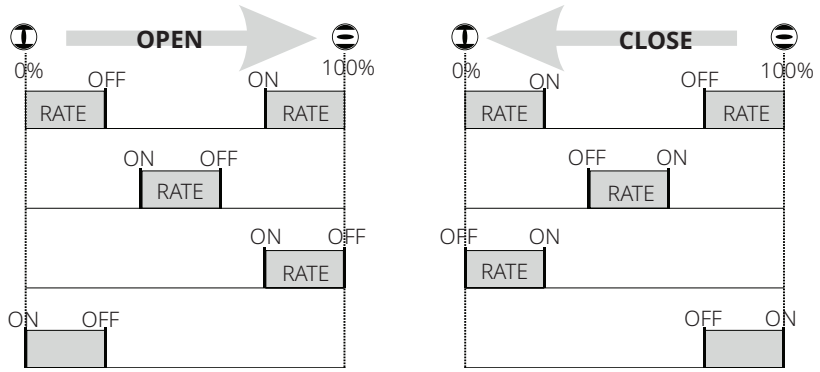

NOTE:

It is important to ensure that the mode of operation is not exceeded.
The running information on the actuator (see Section 7.2.2) only flashes while the drive is running, i.e. during the break, no flash.

8.12 Parameter Group: Positioner (Optional)

The positioner SR option is used to control the electric actuator by means of a setpoint input 0/4 to 20 mA signal. The SR helps control the position of the actuator, i.e. the positioner ensures that the actual value and thus the position of the actuator matches the desired setpoint.

Table 24. Positioner Parameter Group (1)

	Menu Item	Sub Menu Item	Position Setting	Notes/Comments
P13.1	Positioner	Function	off	Positioner disabled.
			1: Position	mA input for the position setpoint.
			2: Position valve characteristic	mA input for the position setpoint, taking into account the valve characteristic.
P13.2	Positioner	Begin (at 0%)	0 to 20.5 mA (4.0 mA)	mA value of the setpoint for the CLOSED (0%) position.
P13.3	Positioner	End (at 100%)	0 to 20.5 mA (20.0 mA)	mA value of the setpoint for the OPEN (100%) position.
P13.4	Positioner	Dead band	0.1 to 10.0% (1.0%)	Tolerance range for the control deviation (setpoint position - actual position) where no adjustment occurs. The deadband should not be set too low to prevent actuator oscillation.
P13.5	Positioner	Gain	1 to 100% (100%)	The gain (gradient) affects the positioning close to the target position. The smaller the gain selected (for example, 20%), the earlier the actuator starts reducing its speed in case of speed variable actuators on approaching the target position. In case of actuators with fixed speed (reversing starters) the speed reduction is done by pulsing (also see parameter P13.9 and P13.10). This leads to a better positioning (smaller reachable deadband). A 100% setting disables this gradient.
P13.6	Positioner	Live zero detect.	Ignore	The setpoint monitoring (monitoring the setpoint to below approximately 2 mA = loss of signal) is disabled.
			1: Stop	Actuator stops on signal failure.
			2: Open	On signal failure, actuator moves the OPEN position.
			3: Close	Actuator moves on signal failure to the CLOSED position.
			4. Emergency Position	On signal failure, the actuator moves the defined emergency position (see parameter P13.7).
			5: Emergency Open	Emergency open on signal failure.
			6: Emergency Close	Emergency close on signal failure.
			7: Last valid value	Moves to the last valid value after signal failure; relevant for setpoints over bus. The actuator will move to the 4 mA position, in case of an analog input signal failure.
			8: Fail-safe	Fail-safe-operation on signal failure.

Table 25. Positioner Parameter Group (2)

	Menu Item	Sub Menu Item	Position Setting	Notes/Comments
P13.7	Positioner	Emergency Position	0 to 100% (50.0%)	Determination of the emergency position. (It can also be set in the menu P8.5)
P13.8	Positioner	Calibration setpoint	-10% to +10%	Calibration value for the mA setpoint Calibration process: By applying 20 mA on the setpoint input, this parameter is corrected until the readout matches 20 mA.
P13.9	Positioner	Minimum Impulse	(0.2 seconds)	Variable speed actuator (RTS Compact Multi-Turn CM): Without function Fixed speed actuator: Minimum activation time of the reversing contactors. For very small activation times (<0.3 to 0.5 seconds), the motor will be switched off during start-up process, which increases significantly reversing contactors mechanical wear. With frequent periods of very small activation times (restless loop, small dead zone, clocking near to the target value), we therefore recommend electronic reversing contactor.
P13.10	Positioner	Period	(2.0 seconds)	Variable speed actuator (RTS Compact Multi-Turn CM): Without function Fixed speed actuator: This parameter is only relevant when Step mode is enabled and when approaching the target position (parameter gain smaller than 100%) and determines the period of a run/pause cycle.
P13.11	Positioner	Begin Position (a0)	0 to 25.0% (2.0%)	Smallest controllable position other than the end position CLOSED. The range 0% - a0 will be just passed through. Use the parameter a0 to define the beginning of the allowable control range of the valve (e.g., blind spot for ball segment valves, etc.).
P13.12	Positioner	End Position (e0)	75.0 to 100.0% (98.0%)	Largest controllable position other than the end position OPEN. The area e0 - 100% is just passed through. Use the parameter e0 to define the end of the allowable control range of the valve.
P13.13	Positioner	Begin setpoint (a1)	0 to 25.0% (2.0%)	Below this value, the end position CLOSED is controlled. In the range 0% - a1 cannot be controlled (end position tolerance). The initial setpoint a1 is associated with a small hysteresis (1/4 of the deadband).
P13.14	Positioner	End setpoint (e1)	75.0 to 100.0% (98.0%)	Above this value, the end position OPEN is controlled. The range e1 - 100% cannot be controlled (end position tolerance). The final setpoint e1 is associated with a small hysteresis (1/4 of the deadband).
P13.15	Positioner	Calibration setpoint offset	-10% to +10%	Calibration of zero for the input setpoint, 1% = 0.2 mA
P13.16	Positioner	Hysteresis	0 to 100%	Hysteresis range for setpoint signal, with regard to the dead band. Setting 0 equals to a hysteresis of 25%.

Figure 62. Assigning the position to the setpoint

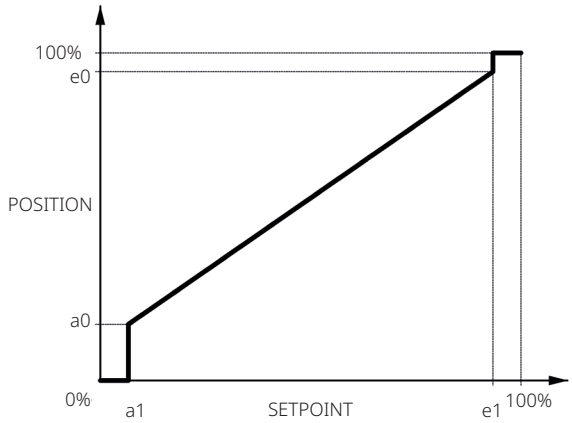

Figure 63. Function Principle of the Deadband, and Hysteresis in Conjunction with the Positioner

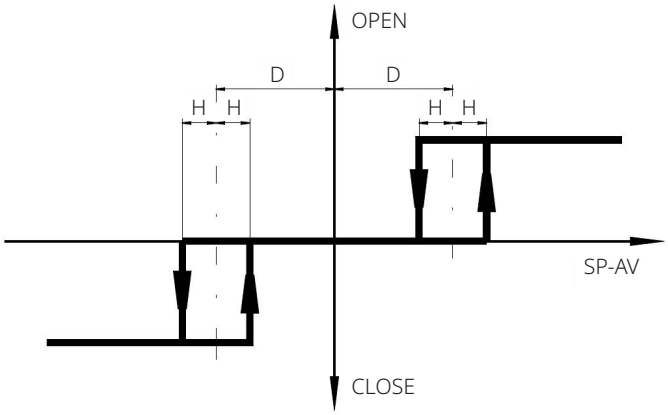

Figure 63 shows the working principle of the parameters “P13.4 - Deadband” and “P13.16 - Hysteresis”. The set dead band thresholds are added and subtracted from the setpoint. The hysteresis sets the threshold on the deadband thresholds. e.g., if the setpoint is 50%, dead band is 1% and hysteresis is 50%, the dead band thresholds will be at 49% and 51%. On top of that, the hysteresis for the 49% threshold will be at 50% of the dead band value, which is ±0.5%; thus the hysteresis on the 49% dead band threshold is at 48.5% and 49.5%. The actuator will move toward 50%, if the actual position is below 48.5% and stop, if the actual position is between 49.5% and the “outer” hysteresis mirrored on the ordinate, which is 51.5% in this case.

NOTE:

Please be aware, that a 100% setting for hysteresis will cause oscillation due to overlapping thresholds.

8.13 Parameter Group: PID-Controller (Optional)

The optional PID-controller is used for controlling an external actual value (process variable) to a setpoint using 0/4 to 20 mA signal by readjusting the actuator.

Table 26. PID-Controller Parameter Group (1)

	Menu Item	Sub Menu Item	Position Setting	Notes/Comments
P14.1	PID-controller	Function	0: disabled	PID-controller disabled.
			1: Position	The output of the PID-controller corresponds to the position setpoint of the actuator. The positioning (tracking of the actual position to the setpoint) is done by the positioner (see Section 8.12).
			2: Speed	The output of the PID-controller corresponds to the change of the position setpoint (speed) of the actuator. The positioning (tracking of the actual position to the setpoint) is done by the positioner (see Section 8.12).
			3: Speed	The output of the PID-controller corresponds to the change of the position setpoint (speed) of the actuator. The positioning (tracking of the actual position to the setpoint) is done by the positioner (see Section 8.12). Hence a control mode similar to the Speed mode (see Setting 2, above) is possible also for actuators with constant speed.
P14.2	PID-controller	External Setpoint	0: fixed	The PID-controller uses an internal, fixed setpoint (see P14.3).
			1: external	The PID-controller uses the external setpoint The adjustment of this setpoint is done with the parameters P13.2 and P13.3 (see Section 8.12).
P14.3	PID-contoller	Fixed setpoint	0 to 100%	Specification of the internal fixed setpoint.
P14.4	PID-contoller	Start (at 0%)	0 to 20.5 mA	mA value at 0% of the external actual value.
P14.5	PID-controller	End (at 100%)	0 to 20.5 mA	mA value at 100% of the external actual value.
P14.6	PID-contoller	Gain (P)	+50.0 to 50.0	Gain (proportional value) of the PID-controller. A negative value reverses the effective direction of the PID-controller, e.g.: Positive gain: The actuator opens when the desired value is greater than the external actual value. Negative gain: The actuator closes when the desired value is greater than the external actual value.
P14.7	PID-contoller	Reset time (I)	0 to 100.0 seconds	The shorter the reset time (integral time, integral value), the stronger is the effect of the integral component of the PID-controller. Values below 1,0 will disable the integral component.
P14.8	PID-controller	Lead time (D)	0 to 100.0 seconds	The larger the lead time (differential/derivative value), the stronger is the effect of the derivative component of the PID-controller. To reduce the influence of noise a first-order lag element with 1 second time constant is added (DT1) .

Table 27. PID-Controller Parameter Group (2)

	Menu Item	Sub Menu Item	Position Setting	Notes/Comments
P14.9	PID-contoller	Offset	-200 to 200%	The offset value will be added to the output value of the PID-controller.
P14.10[3]	PID-controller	Inverse operation	0: Off	The output of the PID controller is not inverted.
			1: On	The output of the PID controller is inverted.
P14.12	PID-contoller	Live zero detect	0: Ignore	The monitoring of the external actual value is disabled.
			1: Stop	Actuator stops on signal failure of external, actual value
			2: Open	On signal failure of external actual values, actuator moves to the OPEN position.
			3: Closed	On signal failure of external actual values, actuator moves to the CLOSED position.
			4: Emergency Position	On signal failure of external actual values, actuator moves to the EMERGENCY position (see P13.7).
			5: Emergency PID	Reserved for future use
P14.13	PID-contoller	Calibration of external actual value	-10.0 to +10.0%	Calibration process: By applying 20 mA to the external actual value input, this parameter is corrected until the readout matches 20 mA.
P14.14	PID-contoller	Process begin	32768 to +32767	Mantissa of the real process variable (begin of external actual value)
P14.15	PID-contoller	Process end	32768 to +32767	Mantissa of the real process variable (end of external actual value)
P14.16	PID-contoller	Process comma shift	-3 to +3	Position of the comma for process begin/end (P14.14, P14.15), e.g.: mantissa = 200, comma shift = -2/2, process value = 2.00/20000
P14.17	PID-contoller	Process unit	-	Unit of the real process variable
P14.18	PID-contoller	Deadband	0.1 to 10.0% {1.0%}	Tolerance range for the control deviation (setpoint – external actual value) where no adjustment occurs.

NOTE:
[3] from firmware 1.609

8.14 Parameter Group: Bus Systems (Optional)

The manuals for Bus Systems are available at www.emerson.com, Bettis RTS Electric Actuator under Manuals and Guides tab.

8.15 Parameter Group: Characteristic Curves (Optional)

With this option, customers can enable travel-dependent torque, speed and valve characteristic curves.

8.15.1 Torque Characteristics

With this characteristic curve, torque limits already set under menu item P2-torque can be further reduced depending on travel. Characteristics can be configured via the SMARTTOOL software (see Figure 64).

Figure 64. Torque Characteristic Curve Display

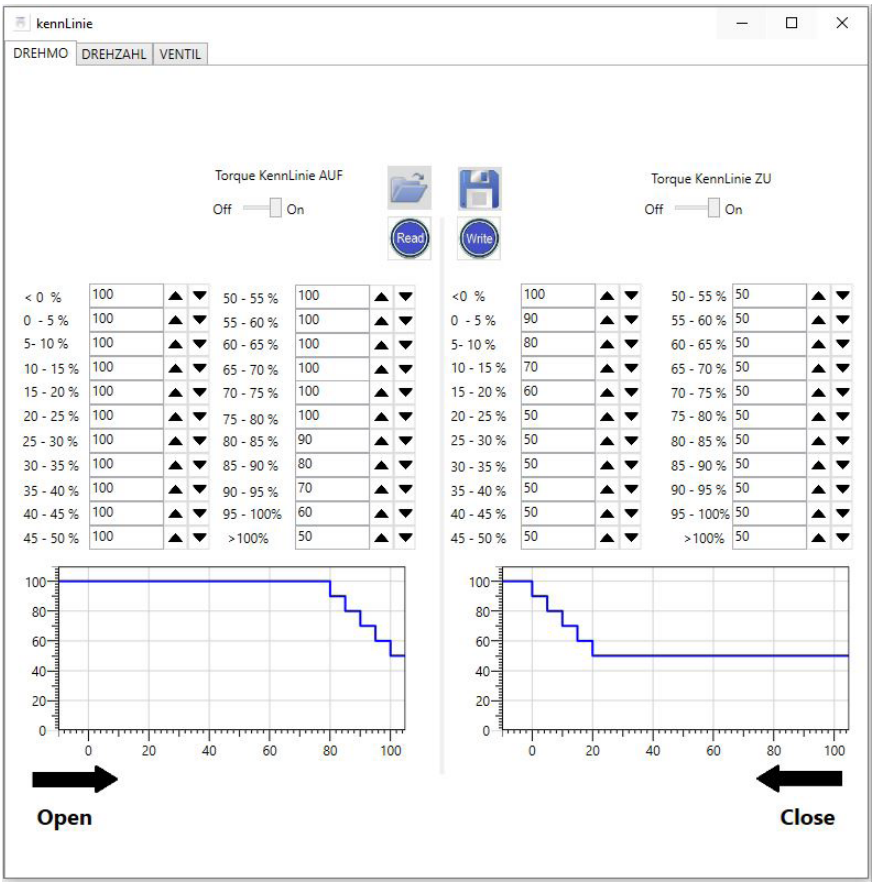

Table 28. Torque Characteristic Curve Parameter Group

	Menu Item	Sub Menu Item	Position Setting	Notes/Comments
P17.1	Characteristic	Torque Open	0: Off	The torque characteristic curve is disabled for the OPEN direction.
			1: On	The torque characteristic curve is enabled for the OPEN direction.
P17.2	Characteristic	Torque Closed	0: Off	The torque characteristic curve is disabled for the CLOSED direction.
			1: On	The torque characteristic curve is enabled for the CLOSED direction.

8.15.2 Speed Characteristics

With this characteristic curve, speed limits already set under menu item P4-speed (see Section 8.3) can be further reduced depending on travel. Characteristics can be configured via the SMARTTOOL software (see Figure 65).

Figure 65. Speed Characteristic Curve Display

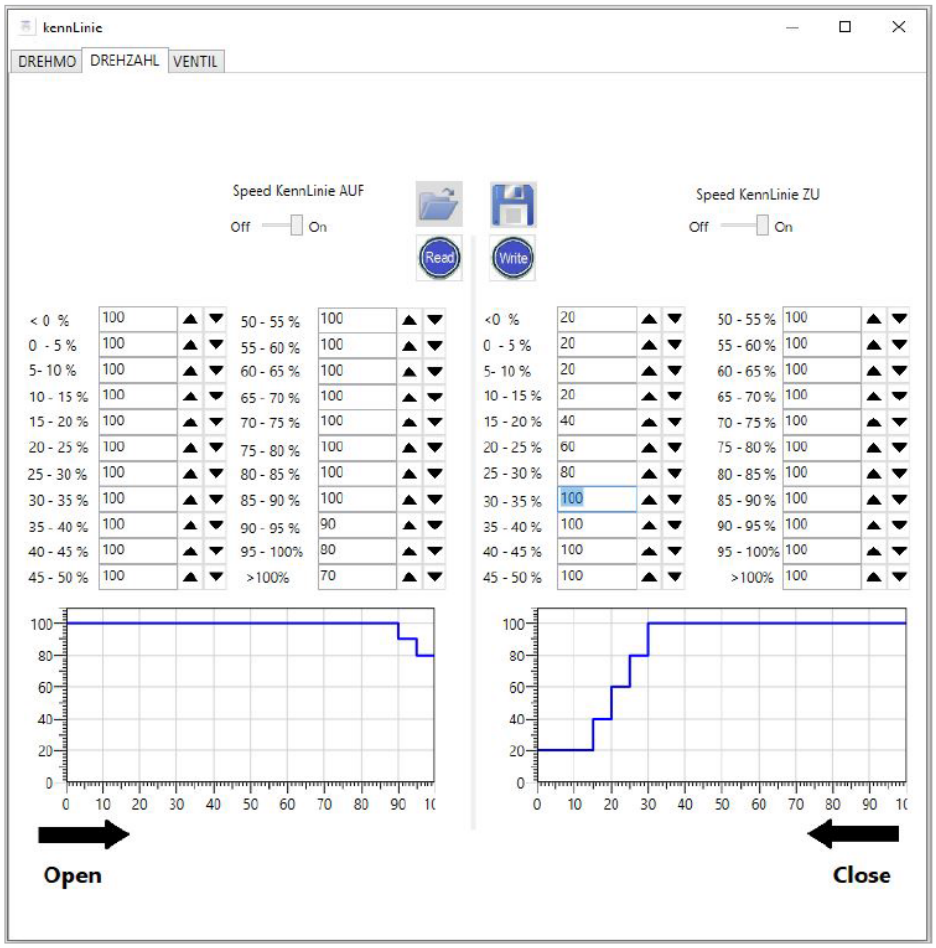

Table 29. Speed Characteristic Curve Parameter Group

	Menu Item	Sub Menu Item	Position Setting	Notes/Comments
P17.3	Characteristic	Speed Open	0: Off	The speed characteristic curve is disabled for the OPEN direction.
			1: On	The speed characteristic curve is enabled for the OPEN direction.
P17.4	Characteristic	Speed Closed	0: Off	The speed characteristic curve is disabled for the CLOSED direction.
			1: On	The speed characteristic curve is enabled for the CLOSED direction.

8.15.3 Valve Characteristics

With this characteristic curve the mapping between the actuator position and the setpoint of the valve can be adjusted. Hence it is possible to compensate and linearize the general nonlinear characteristic curves of valves. Characteristics can be configured via the SMARTTOOL software (see Figure 66).

Figure 66. Valve Characteristic Curve Display

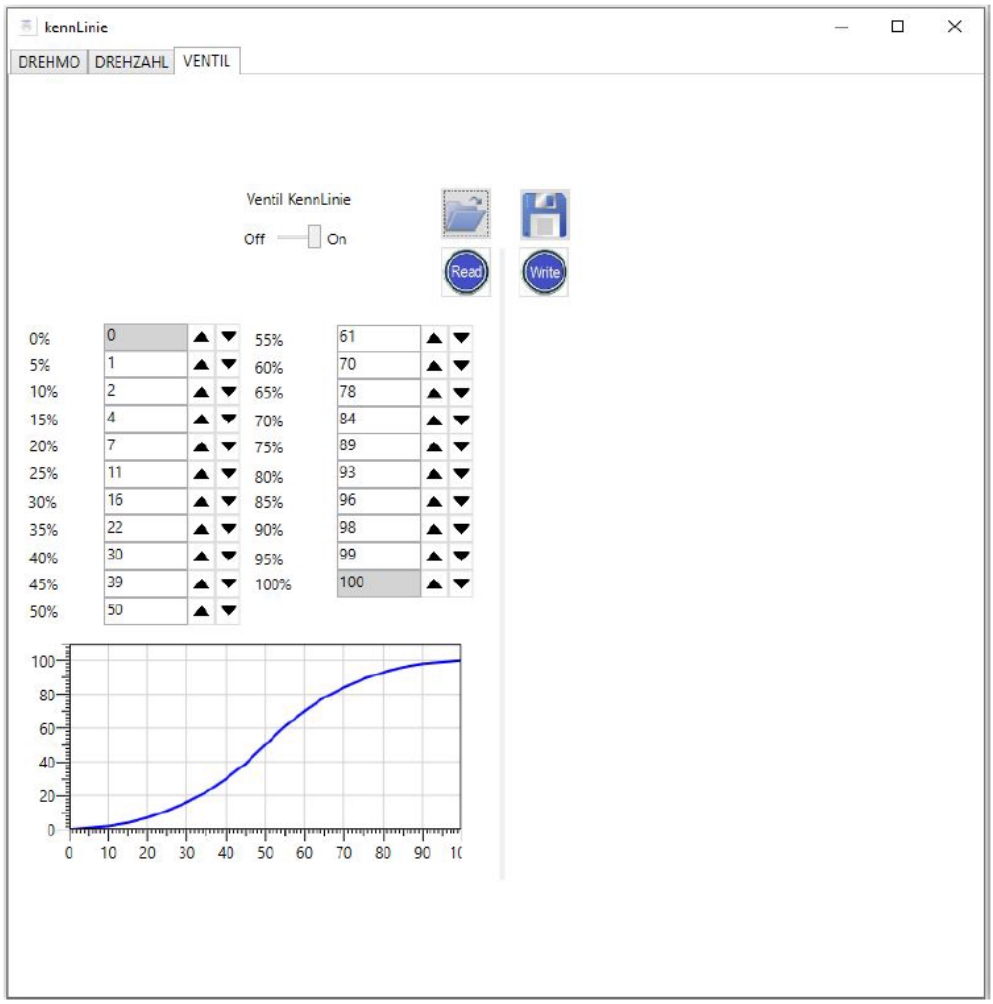

Table 30. Valve Characteristic Curve Parameter Group

	Menu Item	Sub Menu Item	Position Setting	Notes/Comments
P17.5	Characteristic	Valve	0: Off	The valve characteristic curve is disabled.
			1: User defined	The valve characteristic curve is enabled as configured in the SMARTTOOL.

8.16 Parameter Group: Identification (Optional)

This option allows entering further custom-identification parameters.

Table 31. Identification Parameter Group

	Menu Item	Sub Menu Item	Position Setting	Notes/Comments
P18.1	Identification	PPS number	15 digits	Used to enter a PPS number. This is displayed in the bottom line. CAUTION: Parameter P20.5 must be set to 0.

8.17 Parameter Group: System Parameters

Used for actuator configuration. Most of these parameters are used to display crucial information about the actuator configuration for servicing, thus, only visible for user level service or higher.

Table 32. System Parameters Group

	Menu Item	Sub Menu Item	Position Setting	Notes/Comments
P19.6	System Parameters	Calibration IST	-10 to +10%	T is value is used to offset the output signal of the RTS CM control unit's analog output. The mA-signal may be calibrated with a current measurement device.
P19.7	System Parameters	Calibration Setpoint 20 mA	-10 to +10%	This value is used to offset the input signal on analog input 1 measured by the RTS CM control unit. The measured mA-signal may be calibrated with an external setpoint generator.
P19.8	System Parameters	Calibration of external actual value 20 mA	-10 to +10%	This value is used to offset the input signal on the external analog input 2 measured by the RTS CM control unit. The measured mA-signal may be calibrated with an external setpoint generator.
P19.12	System Parameters	LCD Contrast	80 to 150	The display contrast may be set with this parameter.
P19.15	System Parameters	Welcome Menu	0; 1	Starts the actuator with the welcome menu on startup, if set to 1.
P19.21	System Parameters	LED Function	-	See "P1.7 - LED function" in Section 8.1.
P19.33	System Parameters	MUSE-Detection	0: -	MUSE-Detection is not executed.
			1: Execute	MUSE-Detection is executed.
P19.56	System Parameters	LCD Inverse	0; 1	Inverts the display pixels.

8.18 Parameter Group: Miscellaneous

Table 33. Miscellaneous Parameter Group

	Menu Item	Sub Menu Item	Position Setting	Notes/Comments
P20.1	Miscellaneous	Language	0: German	Defines the menu language
			1: English	
			2: Russian	
			3: Czech	
			4: Spanish	
			5: French	
			6: Italian	
			7: Danish	
			8: Hungarian	
			9: Turkish	
			10: Greek	
			11: Polish	
			12: Serbian	
			13: Croatian	
			14: Bulgarian	
			15: Dutch	
			16: Romanian	
			17: Swedish	
P20.2	Miscellaneous	Smart code	-	Enables additional features by entering a Smart code.
P20.3	Miscellaneous	Restore Parameters	0	No action.
			1: Customer parameters -	By saving this setting, all parameters except the end positions are reset to the customer parameters.
			2: Customer parameters -	By saving this setting, all parameters are reset to the customer parameters.
			3: Backup parameters -	By saving this setting, all parameters except the end positions are reset to the factory settings.
			4: Backup parameters -	By saving this setting, all parameters are reset to the factory settings.
			5: Workshop -	Restores all parameters to the workshop backup parametrization, without changing the end limits (P1.1 and P1.2) and the switch off torques and torque limit(P2.1, P2.2 and P2.3).
			6: Workshop +	Restores all parameters to the workshop backup parametrization, including the end limits (P1.1 and P1.2) and the switch off torques and torque limit(P2.1, P2.2 and P2.3).
P20.4	Miscellaneous	Backup Parameters	0	No action.
			1: Customer parameters -	By saving this setting, the currently set parameters are adopted as customer parameters.
			2: Service	By saving this setting, the current parameters are adopted as service parameters.
			3: Workshop	By saving this setting, the current parameters are adopted as workshop parameters.
P20.5	Miscellaneous	Information line	0 to 15	The fourth line of the display shows various diagnostic values.
P20.6	Miscellaneous	Infrared	0: Off	The infrared connection is disabled.
			1: Infrared	The infrared connection is activated for about 3 minutes.
			2: Bluetooth	The Bluetooth connection is active for about 3 minutes unless communication is detected.
			3: Infrared+	The infrared connection is activated.
			4: Bluetooth+	The Bluetooth connection is activated.
P20.7	Miscellaneous	Menu style	0 to 2	Different menu styles.
P20.9	Miscellaneous	Time	-	Sets the date and time on the actuator. Move the red selector switch to highlight the next value, and down to highlight the prior value.
P20.10	Miscellaneous	Time zone	-840 to 840 min.	Sets the time zone; offsets the shown time in minutes.
P20.11	Miscellaneous	Daylight saving time	0: Off	Normal time is activated.
			1: On	Daylight saving time is activated.
			2: Auto	The actuator switches automatically between Daylight saving time and Normal time.

NOTE:
Backups are prioritized; the higher the number, the higher the priority. For example, if parameters are backed up as service, the customer parameters will be overwritten.

8.19 Default User Level Settings

Tables 34, 35 and 36 show the default user level settings for all parameters on a brand new actuator.

Table 34. Default User Level Settings (1)

Parameter	Menu Item	Sub Menu Item	Default UL Read	Default UL Write
P1.1	End Limit	Open	1	3
P1.2	End Limit	Close	1	3
P1.3	End Limit	Switch off Open	2	4
P1.4	End Limit	Switch off Close	2	4
P1.5	End Limit	Closing direction	2	4
P1.7	End Limit	LED Function	1	3
P1.8	End Limit	Hysteresis	2	4
P1.9	End Limit	Ramp	2	4
P1.10	End Limit	Range	2	4
P1.11	End Limit	Overrun Open	2	4
P1.12	End Limit	Overrun Close	2	4
P2.1	Torque	Open	2	4
P2.2	Torque	Close	2	4
P4.1	Speed	Local Open	2	4
P4.2	Speed	Local Close	2	4
P4.3	Speed	Remote Open	2	4
P4.4	Speed	Remote Close	2	4
P4.5	Speed	Emergency Open	2	4
P4.6	Speed	Emergency Close	2	4
P4.7	Speed	Torque-depended operation	2	4
P4.8	Speed	Minimal	2	4
P5.1	Ramp	Local	2	4
P5.2	Ramp	Remote	2	4
P5.3	Ramp	Emergency	2	4
P6.2	Control	Ready delay	2	4
P6.5	Control	24 V Output	2	4
P6.6	Control	Minimum Impulse	2	4
P6.17	Control	Remote Display	2	4
P7.1	User Level	Local	2	4
P7.2	User Level	Bus	2	4
P7.3	User Level	Remote Display	2	4
P7.4	User Level	Change Password	1	1
P8.1	Position	Intermediate Position 1	1	3
P8.2	Position	Intermediate Position 2	1	3
P8.3	Position	Intermediate Position 3	1	3
P8.4	Position	Intermediate Position 4	1	3
P8.5	Position	Emergency position	1	3
P8.6	Position	Hysteresis	1	3
P8.7	Position	Intermediate Position 5	1	3
P8.8	Position	Intermediate Position 6	1	3
P8.9	Position	Intermediate Position 7	1	3
P8.10	Position	Intermediate Position 8	1	3
P8.11	Position	Dead Band	1	3
P8.12	Position	Gain	1	3
P8.13	Position	Hysteresis	1	3
P8.14	Position	Intermediate Position 9	1	3
P8.15	Position	Intermediate Position 10	1	3
P8.16	Position	Intermediate Position 11	1	3
P8.17	Position	Intermediate Position 12	1	3

Table 35. Default User Level Settings (2)

Parameter	Menu Item	Sub Menu Item	Default UL Read	Default UL Write
P8.18	Position	Intermediate Position 13	1	3
P8.19	Position	Intermediate Position 14	1	3
P8.20	Position	Intermediate Position 15	1	3
P8.21	Position	Intermediate Position 16	1	3
P9.1	Binary Input	Input 1	2	4
P9.2	Binary Input	Input 2	2	4
P9.3	Binary Input	Input 3	2	4
P9.4	Binary Input	Input 4	2	4
P9.5	Binary Input	Input 5	2	4
P10.1	Binary Output	Output 1	2	4
P10.2	Binary Output	Output configuration 1	2	4
P10.3	Binary Output	Output 2	2	4
P10.4	Binary Output	Output configuration 2	2	4
P10.5	Binary Output	Output 3	2	4
P10.6	Binary Output	Output configuration 3	2	4
P10.7	Binary Output	Output 4	2	4
P10.8	Binary Output	Output configuration 4	2	4
P10.9	Binary Output	Output 5	2	4
P10.10	Binary Output	Output configuration 5	2	4
P10.11	Binary Output	Output 6	2	4
P10.12	Binary Output	Output configuration 6	2	4
P10.13	Binary Output	Output 7	2	4
P10.14	Binary Output	Output configuration 7	2	4
P10.15	Binary Output	Output 8	2	4
P10.16	Binary Output	Output configuration 8	2	4
P11.1	Analog Signal	Function 1	2	4
P11.2	Analog Signal	Begin 1 (at 0%)	2	4
P11.3	Analog Signal	End 1 (at 100%)	2	4
P11.4	Analog Signal	Calibration 20 mA 1	2	4
P11.5	Analog Signal	Function 2	2	4
P11.6	Analog Signal	Begin 2 (at 0%)	2	4
P11.7	Analog Signal	End 2 (at 100%)	2	4
P11.8	Analog Signal	Calibration 20 mA 2	2	4
P12.1	Step mode	Function	2	4
P12.2	Step mode	Start Open	2	4
P12.3	Step mode	End Open	2	4
P12.4	Step mode	ON time Open	2	4
P12.5	Step mode	OFF time Open	2	4
P12.6	Step mode	Start Close	2	4
P12.7	Step mode	End Close	2	4
P12.8	Step mode	ON time Close	2	4
P12.9	Step mode	OFF time Close	2	4
P12.10	Step mode	Time base	2	4
P12.11	Step mode	Speed adaption	2	4
P13.1	Positioner	Function	2	4
P13.2	Positioner	Begin (at 0%)	2	4
P13.3	Positioner	End (at 100%)	2	4
P13.4	Positioner	Dead band	2	4
P13.5	Positioner	Gain	2	4
P13.6	Positioner	Live zero detect.	2	4
P13.7	Positioner	Emergency Position	1	3
P13.8	Positioner	Calibration setpoint	2	4
P13.9	Positioner	Minimum Impulse	2	4
P13.10	Positioner	Period	2	4

Table 36. Default User Level Settings (3)

Parameter	Menu Item	Sub Menu Item	Default UL Read	Default UL Write
P13.11	Positioner	Begin Position (a0)	2	4
P13.12	Positioner	End Position (e0)	2	4
P13.13	Positioner	Begin setpoint (a1)	2	4
P13.14	Positioner	End setpoint (e1)	2	4
P13.15	Positioner	Calibration setpoint offset	2	4
P13.16	Positioner	Hysteresis	2	4
P14.1	PID-controller	Function	2	4
P14.2	PID-controller	External setpoint	2	4
P14.3	PID-controller	Setpoint value	2	4
P14.4	PID-controller	Begin (at 0%)	2	4
P14.5	PID-controller	End (at 100%)	2	4
P14.6	PID-controller	Proportional	2	4
P14.7	PID-controller	Integral	2	4
P14.8	PID-controller	Differential	2	4
P14.9	PID-controller	Offset	2	4
P14.12	PID-controller	Live zero detect.	2	4
P14.13	PID-controller	Calibration of external actual value	2	4
P14.14	PID-controller	Process begin	2	4
P14.15	PID-controller	Process end	2	4
P14.16	PID-controller	Process comma shift	2	4
P14.17	PID-controller	Process unit	2	4
P14.18	PID-controller	Dead band	2	4
P16.1	Stroke test	Stroke test	2	4
P16.2	Stroke test	Start position	2	4
P16.3	Stroke test	Test range	2	4
P16.4	Stroke test	Resting time	2	4
P16.5	Stroke test	Speed Open	2	4
P16.6	Stroke test	Speed Close	2	4
P16.7	Stroke test	Time trigger	2	4
P16.8	Stroke test	Maximum time	2	4
P16.9	Stroke test	Start Time	2	4
P16.10	Stroke test	Start Test	2	4
P17.1	Characteristic	Torque Open	2	4
P17.2	Characteristic	Torque Close	2	4
P17.3	Characteristic	Speed Open	2	4
P17.4	Characteristic	Speed Close	2	4
P17.5	Characteristic	Valve	2	4
P18.1	Identification	KKS-Number	2	4
P19.6	System	Calibration IST	2	4
P19.7	System	Calibration SOLL	2	4
P19.8	System	Calibration EIST	2	4
P19.12	System	LCD Contrast	2	4
P19.15	System	Welcome Menu	4	4
P19.21	System	LED Function	1	3
P19.56	System	LCD Inverse	2	4
P20.1	Miscellaneous	Language	1	3
P20.2	Miscellaneous	Smart code	1	1
P20.3	Miscellaneous	Restore	4	4
P20.4	Miscellaneous	Backup	4	4
P20.5	Miscellaneous	Information display	1	3
P20.6	Miscellaneous	Wireless	1	3
P20.7	Miscellaneous	Menu Style	1	3
P20.9	Miscellaneous	Time	1	3
P20.10	Miscellaneous	Time zone	1	3
P20.11	Miscellaneous	Daylight saving time	1	3

Section 9: Status Area

The status area presents current process and diagnostic data. Their data is read-only. To access the status area, move the control switch in the direction where the selector switch should be in the neutral position or in the remote position.

The status area is divided into 2 sub-areas:

- Status
- History

9.1 Status

9.1.1 Status – Binary Outputs

Display of binary outputs: The display shows output control as opposed to output status, i.e. the supply of the binary outputs is ignored. A switched output is represented by 1.

Figure 67. Binary Output Display

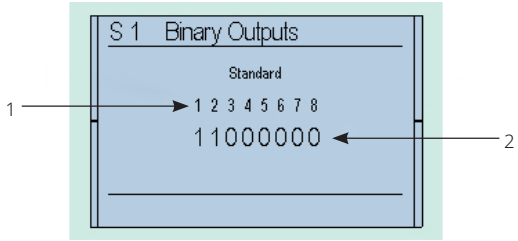

Display Overview:

1. Output Number
2. Signal (0 = Low; 1 = High)

9.1.2 Status – Binary Inputs

Display of binary inputs: A set input is represented by 1.

Figure 68. Binary Input Display

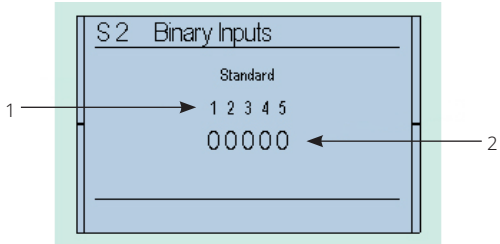

Display Overview:

1. Input Number
2. Signal (0 = Low; 1 = High)

9.1.3 Status – Analogue Values

Display of analogue values: Input 1 (In1) is used by the positioner as the setpoint; Input 2 (In2) serves as an external value for the optional PID-controller. In the analogue output (out), only the control signal is shown, regardless of whether the output current actually flows or not (interruption of the current loop).

Figure 69. Analogue Status Display

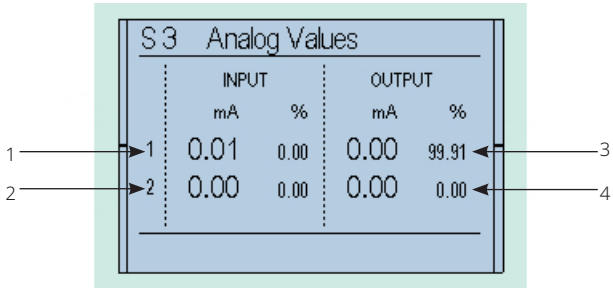

Display Overview:

1. Input 1
2. Input 2
3. Output
4. All values in mA

9.1.4 Status – Absolute Values

This status displays the absolute position of the actuator.

Figure 70. Absolute Value Display

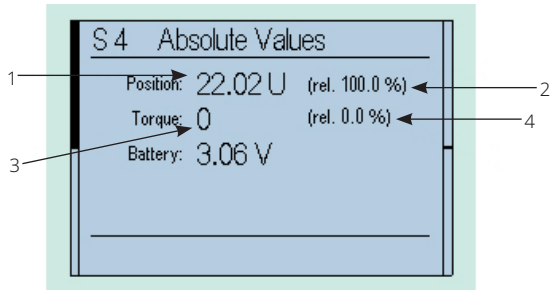

Display Overview:

1. Absolute value of the position unit
2. Relative value of the position unit
3. Absolute value of the torque unit (calibrated in factory)
4. Relative value of the torque unit (calibrated in factory)

9.1.5 Status – Firmware

Figure 71. Firmware Status Display

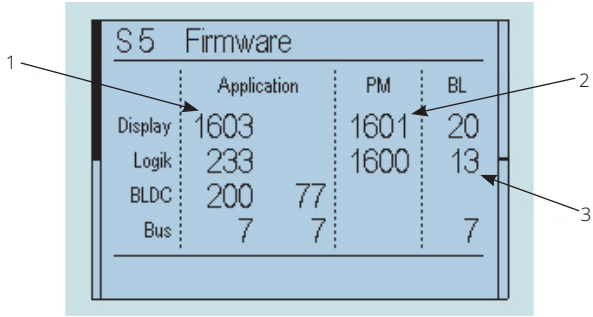

Display Overview:

1. Firmware version
2. Parameter set version
3. Bootloader version

9.1.6 Status – Serial Number

Figure 72. Serial Number Display

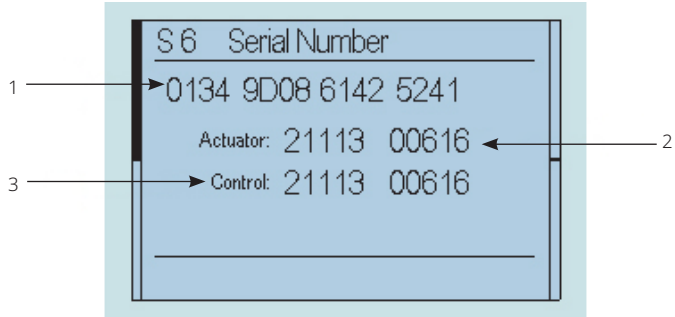

Display Overview:

1. Serial number of electronics
2. Serial number of the actuator
3. Serial number of the control unit

9.1.7 Status – Meter Readings

Figure 73. Meter Readings Status Display

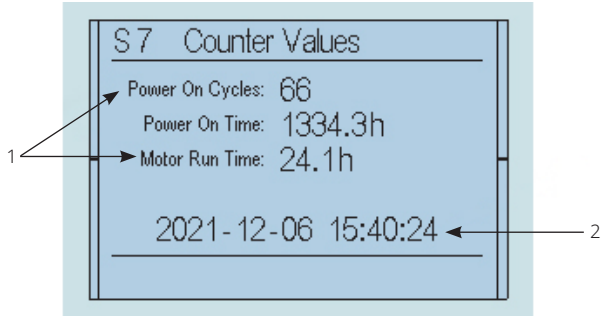

Display Overview:

1. Counters for power on cycles, power on time and motor run time
2. Actual date and time

9.2 History

History shows the last 20 history entries. In addition to the plain text entry, the time since the last history entry is also provided.

Please note that the actuator can only calculate time if energized. For error analysis, please refer to Section 13.1.

NOTE:
Up to 500 history entries are saved and can be viewed with the SmartTool2.

Figure 74. Example for a History Entry

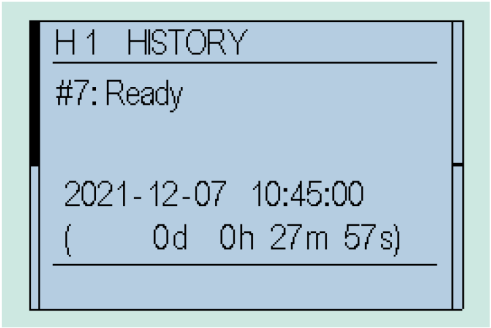

Section 10: Infrared Connection

For easier communication and better visualization of the menu options, the unit provides an infrared port for connection to a PC. The required hardware (connection cable to the PC's RS-232 or USB connectors) and the corresponding software are available as options.

The SMARTTOOL software, in addition to communication with the actuator, allows the management of multiple actuators to transfer the configuration to different actuators. This approach can greatly simplify operation. Please refer to the SMARTTOOL software operating instructions manual for further information.

During operation, it must be ensured that the IR interface surface is protected from strong disturbances which may otherwise compromise the communication.

Before mounting the infrared adapter, clean the surface of the infrared interface with a damp cloth. When the infrared interface is enabled, it is indicated by Light Emitting Diode (see Figure 75). The infrared interface can be enabled in the menu item P20.6.

Figure 75. LED IR Indicator

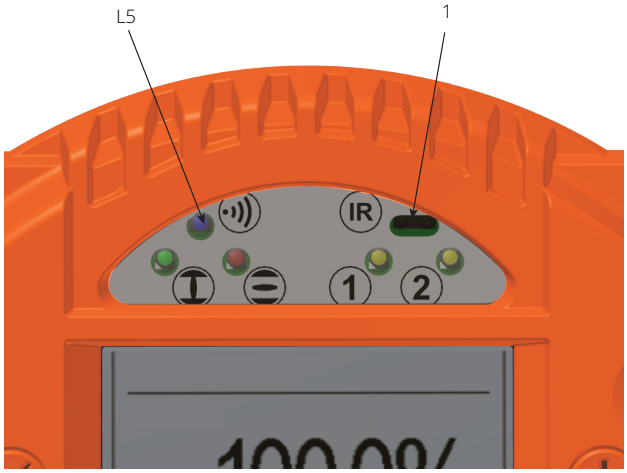

Display Overview:

1 Infrared connection

L5 Bluetooth connection

Section 11: Bluetooth Connection

In addition to the infrared interface, it is also possible to configure the Control System using a Bluetooth interface.

Software required for Android equipment is available as an option. In addition to communication with the actuator, the Android software also enables management of multiple actuators, allowing easy transfer of parameter sets to various actuators. This approach can significantly simplify commissioning.

When the Bluetooth interface is enabled, this is indicated by LED L5 (see Figure 75). The Bluetooth interface can be enabled in menu item P20.6.

Section 12: Maintenance

All maintenance work may only be performed with the actuator powered-off. Due to this requirement, the actuator has to be in the fail-safe position. If this is not the case, it may be because of a fault in the fitting (stuck fitting shaft).

⚠ CAUTION

The actuator has a preloaded disk spring assembly. When loosen the flange mounting bolts, the spring force against the valve can cause the actuator to come loose from the valve. Adequate safety measures must be taken.

Any powering up must be ruled out during maintenance. Work on the electrical systems or components may only be carried out by electricians or by individuals who have been instructed how to do so. Working under the guidance and supervision of an electrician in accordance with electrotechnical regulations. After completing their commissioning, the actuators are ready for use. The actuator is filled with oil as standard when shipped.

Routine checks:

- Be mindful of increased running noises. In cases of long downtimes, operate the actuator at least every three months.
- Check the fail-safe function (check the operating time and smoothness of running in fail-safe operation). Lengthening in the running time may also be caused by an increased torque requirement for the fitting after long down times.

⚠ CAUTION

The actuator has a prestressed coil spring or disk spring assembly. Improper dismounting may lead to both damage to the actuator as well as serious injuries. If maintenance work is needed requiring the actuator to be dismounted, contact Emerson regarding detailed instructions and/or any special purpose tools for relaxing the spring assembly.

The actuators are designed for any mounting position (see Section 3.4), which is why there is neither a filling level indicator nor a drain plug on the main casing.

Depending on the stressing subjected to, do the following approximately every 10,000 to 20,000 hours (about 5 years; see Section 16):

- Oil change
- Replace seals
- Check all the roller bearings and the worm gear assembly and replace if necessary.

Select recommended types of oils and greases to be used from Section 16.

NOTE:

Check the cable glands at regular intervals (annually) for tightness of the cables and retighten if necessary.

If the visual inspection (e.g. dust or water penetration) indicates that the effectiveness of the Sealing elements of the cable entry has suffered damage or aging, such elements have to be replaced preferably by using the original spare parts from the manufacturer of the equipment or through cable entries of comparable quality as well as the same ex- or IP protection class.

Section 13: Troubleshooting

Upon warning or error, the bottom line of the display will show the corresponding plain text description. This event will also be entered into the history (see Section 9.2).

13.1 History Entries

Listed below are all possible history entries. In case of a warning, the alarm will be visualized on the left side of the main display. If an alarm occurs, the display background light will be red and the main display will show that the actuator is not ready.

NOTE:
Each error has a unique error number. Each error also has its separate "OK" message in the history after the fault has gone.

Table 37. History Entries and their Descriptions (1)

History Entry	Type	Description
#3: Motor temperature warning #19: Motor temperature warning OK	Warning	The motor temperature is in the critical range although the actuator remains fully functional.
#4: Motor temperature switch off #20: Motor temperature switch off OK	Alarm	Over temperature in motor, fault on Basis or BLDC, On Basis: loss of main power (3x400 V) or cable break between CSC and motor; on BLDC: cable break between BLDC and motor.
#5: Phase sequence fault #6: Phase sequence OK	N/A	Cause on Basis: Active phase sequence detection on single phase actuators, loss of main power while connected to external 24 V DC auxiliary voltage, or loss of phase L2.
#7: Ready	Information	Written to the history after all errors are gone.
#8: Power On	Information	Is written to the history after power on the actuator, even if there are some errors.
#9: Power supply Fault #21: Power supply OK	Alarm	No power supply to the power electronics (when the controller is powered from the auxiliary power input). Defect of power electronics – please contact the manufacturer.
#11: Fail-safe Fault #12: Fail-safe OK	Alarm	Communication error between fail-safe board and Logic, loss of external 24 V fail-safe Voltage, or over temperature on fail-safe brake.
#13: Manual override #14: Manual override Off	Alarm	Manual override on Fail-safe active (visible in status S4), cable/switch broken.
#17: Travel Sensor Fault #18: Travel Sensor OK	Alarm	The travel unit is outside the permitted range (potentiometer fault on Basis), cable broken or multi-turn sensor calibration lost on CM – please contact the manufacturer.
#22: Torque Sensor Fault #23: Torque Sensor OK	N/A	Potentiometer fault on Basis or cable broken.
#24: Bus Fault #25: Bus OK	Warning	No communication with the optional bus system.
#26: Bus Watchdog #27: Bus Watchdog OK	Warning	Watchdog for bus communication has reacted.
#28: Undervoltage> Warning #29: Voltage OK	Warning	The input voltage is below the regular voltage range, but motor operation is still possible.

Table 38. History Entries and their Descriptions (2)

History Entry	Type	Description
#32: Internal Communication L. Fault #33: Internal Communication L. OK	Alarm	Communication error between Logik and Basis/BLDC, cable broken between boards or board defect.
#34: Internal Communication D. Fault #35: Internal Communication D. OK	Alarm	Communication error between Display and Logik, cable broken between boards, boards defect or firmware update on Logik not properly done.
#36: Fail-safe not ready #37: Fail-safe ready	N/A	Fail-safe voltage OK and fail-safe not initialized (LUS not tensioned).
#38: RTC Battery low #39: RTC Battery OK	Warning	Battery on Display board is empty, loss of time/date or counter values possible.
#44: Inverter Fault #45 Inverter OK	Alarm	BLDC parameter error or defective BLDC. Please contact the manufacturer.
#46: Analog Input 1 Signal Loss #47: Analog Input 1 OK	Warning	SRG active, Positioner live zero detection activated, no setpoint value recognized.
#48: Analog Input 2 Signal Loss #49: Analog Input 2 OK	Warning	External setpoint active, external setpoint live zero detection activated, no external setpoint value recognized
#50: End Limits Are The Same #51: End Limits OK	Alarm	The End limits for OPEN and CLOSE are the same values.
#52: User Input Switches Error #53: User Input Switches OK	Alarm	The selector switches are not calibrated. Please use the calibration function in the wizard in the SmartTool2.
#54: PVST Error #55: PVST OK	Information	The last PVST was not successful.
#56: Internal Communication Fault E>Error #57: Internal Communication Fault E>OK	Warning	Communication error between remote display and main display. Cable to from remote display to EB2_2, EB2_2 to EB2_1, or EB2_1 to main display broken. Also, one of the boards may be faulty.
#58: Under voltage Error	Alarm	The input voltage is below the minimum threshold voltage; motor operation is not given. May appear in the history, if the actuator was turned off, in which case no #29: Voltage OK entry will be registered.
#59: Undervoltage Switch Off	Alarm	The input voltage line caused the actuator to turn off 6 times, indicating an unstable power supply.
#60: Overvoltage Warning	Warning	The input voltage is over the regular supply voltage range. Motor operation is possible.
#61: PVST Start	Information	A PVST procedure was started.
#62: Parameter Write Access	Information	Shows information about, which value was written on a parameter. The values for N, L and S are internal values and useful for diagnosing.
#63: Restore	Information	A restore procedure via P20.3 was undertaken.
#64: Password Change	Information	A password change has been undertaken.
#65: History Cleared	Information	The complete history entry memory was cleared by the manufacturer.

Section 14: Fuses

The logic board of the controller cover (see Figure 77) features two miniature fuses for the control lines.

Figure 76. Fuse location

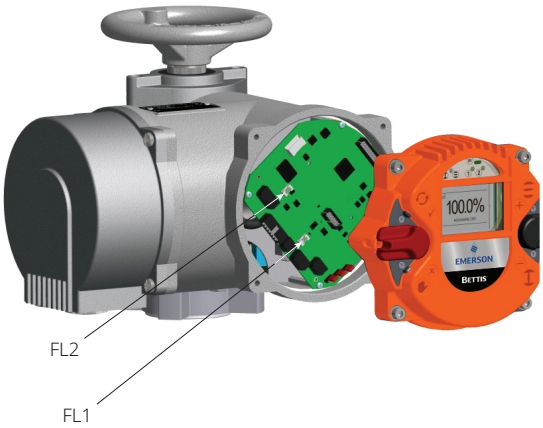

Display Overview:

1. Fuse FL1 is for auxiliary supply
2. Fuse FL2 is for the binary outputs

Table 39. Fuses on the Logic Board

Fuse	Value	Manufacturer	List of spare parts
FL1	1AT	Littelfuse 454 NANO²® Slo-Blo® slow	FUSE-F1
FL2	4AT	Littelfuse 454 NANO² Slo-Blo slow	FUSE-F1

NOTE:
The frequency inverter is protected by an input fuse and the explosion proof version also has a thermal fuse (see Section 3.6.3).

Section 15: Spare Parts

When ordering spare parts, please provide us with the serial number of the actuator. Check the separate break-down image and separate list of spare parts.

Figure 77. Spare Parts - Bettis RTS FQ Fail-Safe QT (ex) CM32

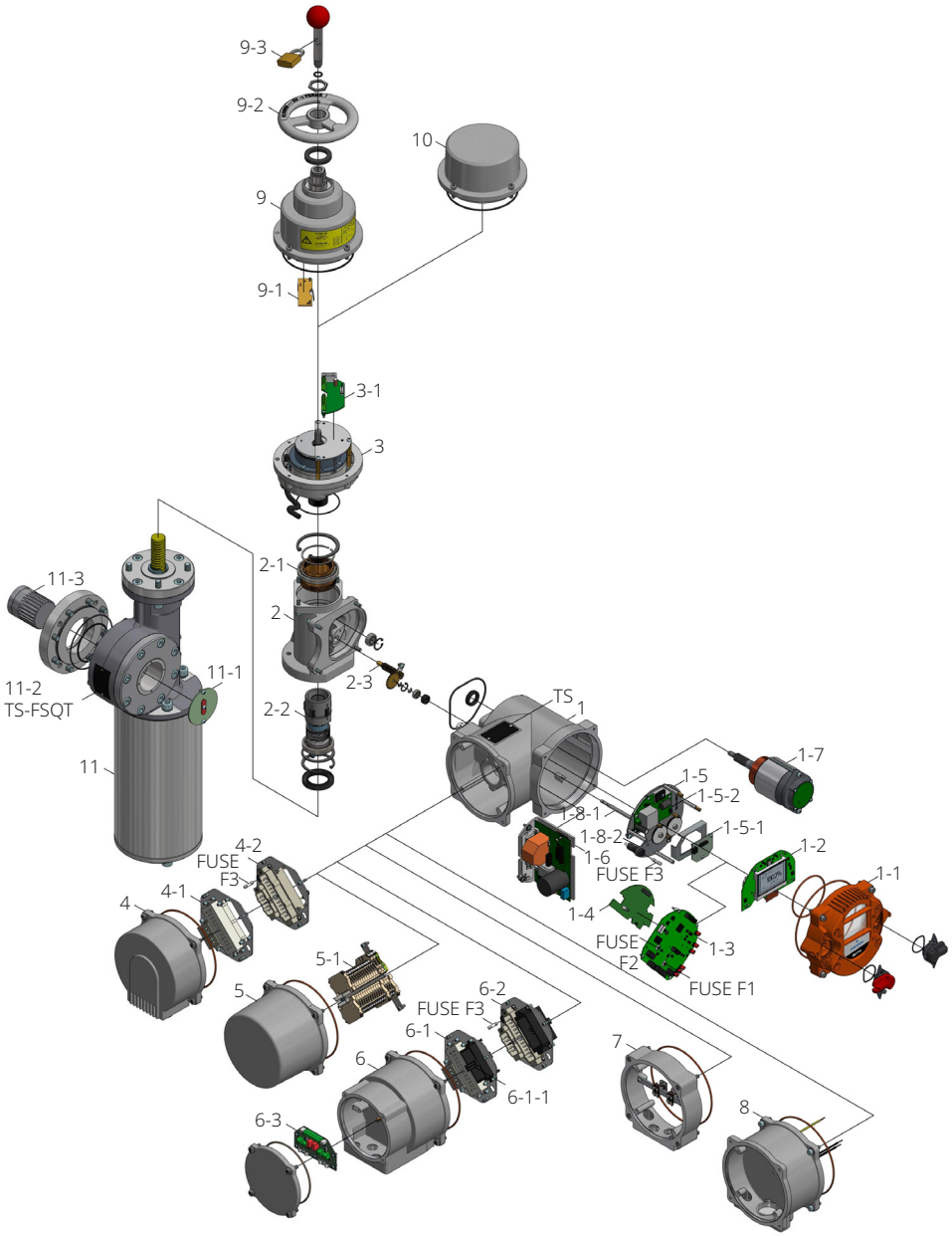

⚠ CAUTION

When ordering spare parts, you must provide the serial number (look type shield or status menu S6). Use only original spare parts supplied by Emerson. Using other parts will render the warranty void. Illustrations may differ from actual spare parts.

Table 40. Parts List RTS FQ Fail-Safe QT (ex) CM32

Asm.	No.	Description
1	-	**E-case**
	1-1	Control unit cover
	1-2	Display circuit board
	1-3	Logic circuit board
	Fuse-F1	Micro fuse 1 A
	Fuse-F2	Micro fuse 4 A
	1-4	Expansion board (bus, relay)
	1-5	Multi-turn sensor assembly
	1-5-1	Multi-turn sensor
	1-5-2	24 V DC step-down converter
	1-6	BLDC power electronics
	Fuse-F3	Fuse 5 A
	1-7	Motor
	1-8-1	Sensor shaft
	1-8-2	Gear
2	-	**Mechanical case**
	2-1	Worm gear
	2-2	Output shaft
	2-3	Helical cut pinion gear
3	-	**Fail-safe brake assembly**
	3-1	Fail-safe PCB
4	-	**Plug cover**
	4-1	Plug frame customer side (socket)
	4-2	Plug frame actuator side (pins)
5	-	**Terminal box cover**
	5-1	Terminal block
6	-	**Entire bus plug cover with plugs and circuit board**
	6-1	Bus plug frame customer side (socket)
	6-2	Bus plug frame actuator side (pins)
	6-3	Bus connection board
7	-	**Additional ring bus (Ex)**
8	-	**400 V module**
TS	-	**Type plate**
9	-	**Handwheel cover**
	9-1	Switch for manual mode
	9-2	Handwheel
	9-3	Padlock
10	-	**Fail-safe brake cover**
11	-	**Fail-safe unit**
	11-1	Mechanical position indicator
	11-2	Output flange
	11-3	Drive bushing
TSFSQT	-	**Type plate fail-safe unit**

Figure 78. Spare Parts - Bettis RTS FQ Fail-Safe QT (ex) CM64

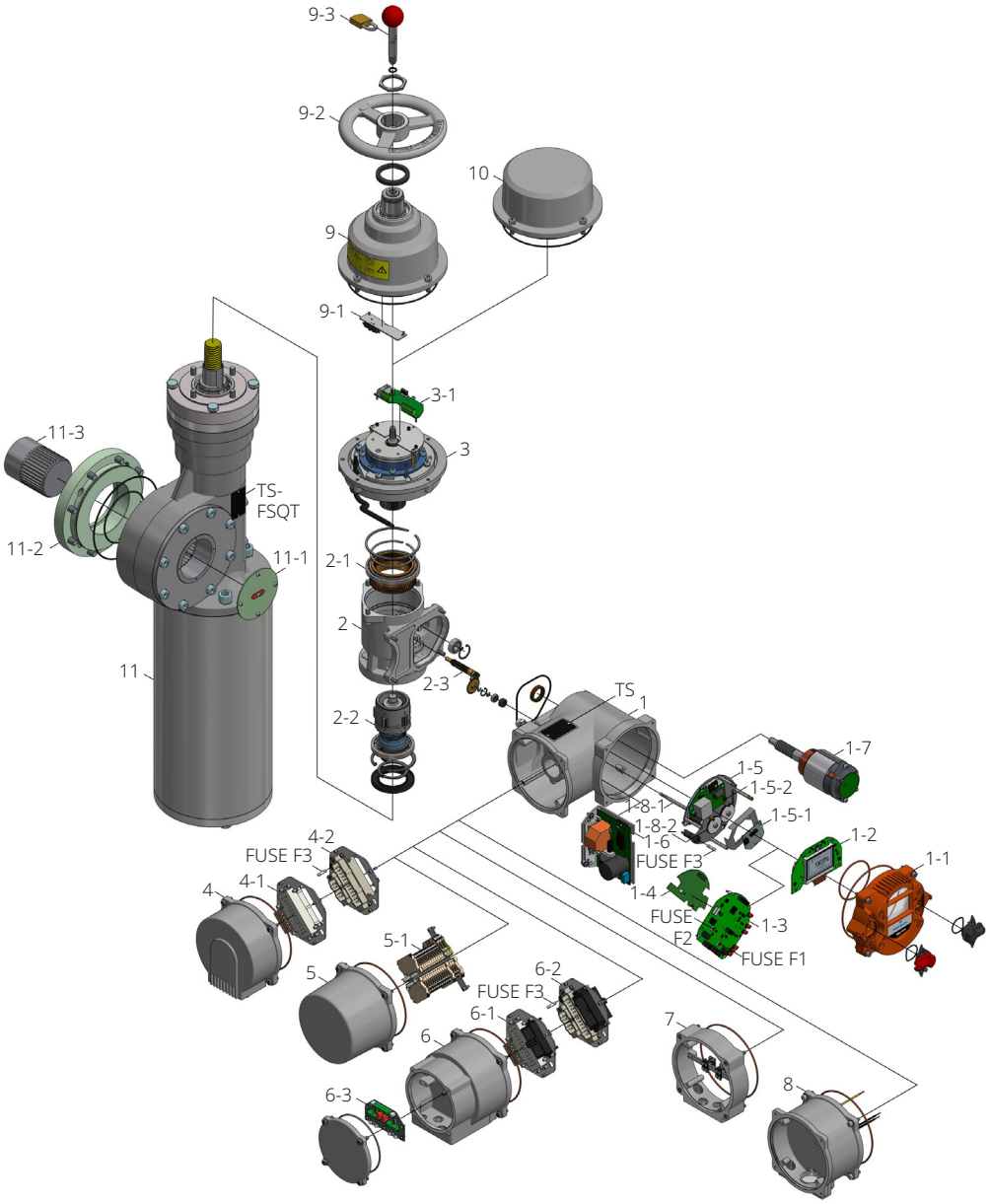

⚠ CAUTION

When ordering spare parts, you must provide the serial number (look type shield or status menu S6). Use only original spare parts supplied by Emerson. Using other parts will render the warranty void. Illustrations may differ from actual spare parts.

Table 41. Parts List RTS FQ Fail-Safe QT (ex) CM64

Asm.	No.	Description
1	-	**E-case**
	1-1	Control unit cover
	1-2	Display circuit board
	1-3	Logic circuit board
	Fuse-F1	Micro fuse 1 A
	Fuse-F2	Micro fuse 4 A
	1-4	Expansion board (bus, relay)
	1-5	Multi-turn sensor assembly
	1-5-1	Multi-turn sensor
	1-5-2	24 V DC step-down converter
	1-6	BLDC power electronics
	Fuse-F3	Fuse 5 A
	1-7	Motor
	1-8-1	Sensor shaft
	1-8-2	Gear
2	-	**Mechanical case**
	2-1	Worm gear
	2-2	Output shaft
	2-3	Helical cut pinion gear
3	-	**Fail-safe brake assembly**
	3-1	Fail-safe PCB
4	-	**Plug cover**
	4-1	Plug frame customer side (socket)
	4-2	Plug frame actuator side (pins)
5	-	Terminal box cover
	5-1	**Terminal block**
6	-	Entire bus plug cover with plugs and circuit board
	6-1	Bus plug frame customer side (socket)
	6-2	Bus plug frame actuator side (pins)
	6-3	Bus connection board
7	-	**Additional ring bus (Ex)**
8	-	**400 V module**
TS	-	**Type plate**
9	-	**Handwheel cover**
	9-1	Switch for manual mode
	9-2	Handwheel
	9-3	Padlock
10	-	**Fail-safe brake cover**
11	-	**Fail-safe unit**
	11-1	Mechanical position indicator
	11-2	Output flange
	11-3	Drive bushing
TSFSQT	-	**Type plate fail-safe unit**

Section 16: Lubricant Recommendations and Requirements

⚠ CAUTION

Please note that safety precautions such as the use of personal protective equipment (PPE) must be followed.

16.1 Main Body: -40 to +60 °C

Operating oil: DIN 51 517-CLP-HC

i.e. fully synthetic high-performance gear oils based on poly-alpha-olefins (PAO)

Viscosity class:	68 ISO VG
Pour point:	< -54 °C (according DIN ISO 3016)
Lubricant requirement CM32:	200 to 250 ml
Lubricant requirement CM64:	300 to 350 ml

16.2 Output Type A and Spindle Drives (Linear Actuators): -40 to +60 °C

Grease DIN 51825-K(P) R-40

i.e. water repellent complex grease on Al-soap base with high resistance to acids and alkalis

Penetration 0.1 mm:	310 to 340
Dropping point:	about 260 °C
NLGI No.:	1

Acid-free, little or not water-reactive

16.3 Alternate Lubricants

16.3.1 Main Body (CM): -40 to +60 °C

- **Operating oil**

i.e. synthetic gear lubricant based on Poly Alpha Olefins (PAO)

Viscosity class:	68 ISO VG
Pour point:	< -48 °C / -55 °F
Lubricant requirement CM32:	200 to 250 ml
Lubricant requirement CM64:	300 to 350 ml

16.3.2 Fail-safe (FQ, FL) and Non fail-safe (QT, L, TB): -40 to +60 °C

- **Grease**

i.e. high-viscosity-index synthetic base grease with calcium sulfonate thickener that increases load-carrying performance and reduces wear and resistance to water washout and oxidation

Penetration 0.1 mm:	265 to 295
Dropping point:	318 °C / 605 °F
NLGI No.:	2

16.4 Basic Lubricant Service Interval

⚠ CAUTION

In Emerson, the service interval for the Bettis RTS actuators is ten years from the shipping date. However, the functionality and service life of the lubricants depends on the operating conditions. Reduction factors must be taken into consideration if applicable.

Table 42. Reduction Factors

Operating Condition(s)	Definition	Reduction Factor (Multiplier)
Duty Time (DT)	(Total engine running time)	-
Extremely high DT	Over 1250 hours/year	0.5
High DT	Over 500 hours/year	0.7
Extremely low DT	Less than 0.5 hours/year	0.8
Ambient temperature	(Permanent or long-term)	-
Extremely changeable	Between -10 and +50 °C	0.5
Extremely high	Above +50 °C	0.7
Extremely low	Below -25 °C	0.9
Output speed	(On actuator main shaft)	-
High speed	Over 80 RPM	0.8
Utilization	(Relative to rated power)	-
Very high	Over 90%	0.8
High	Between 80 and 90%	0.9

Application example:
Extremely low DT + extremely low ambient temperature + high speed + 87% utilization > 0.8 x 0.9 x 0.8 x 0.9 = 0.51 reduction factor
(Lubrication maintenance interval) 10 years x 0.51 = 5.1 years (62 months).

⚠ CAUTION

This calculated maintenance interval does neither apply to the maintenance of output type A (threaded bushing) units nor to the maintenance of linear and spindle drive units. These units must be periodically lubricated (at least every 6 months) via the grease nipples (see Section 16).

During maintenance of our actuators, remove and replace old grease with new one.
Mixing of different lubricant types is NOT permitted.
Quantities needed for lubricant service are listed in Section 16.

16.5 Lubricant Points FQ

The table values given apply to re-lubrication in accordance with the re-lubrication intervals in the operating instructions. After re-lubrication has been carried out, 2 to 3 full strokes must be performed. If torque switch off occurs, the grease nipples must be removed and the strokes repeated.

NOTE:
Lubricant can leak out of the lubrication points.

The grease nipples should be re-installed, in case of removal.

At initial assembly or upon complete disassembly of the spindle nut is filled, all gears and bearings pocketed filling. All moving parts as well as internal surfaces are coated to cover them.

- Lubricant quantity according to expenditure.
- Lubricant specification according to the operating instructions depending on the temperature range.

Table 43. Lubrication Point (Quantity)

Type	1 Main Gear (cm^3)	2 Bearing Spindle Drive (cm^3)	3 Intermediate Gear (cm^3)
FQ-03	8	-	-
FQ-06	18	-	-
FQ-10	20	42	-
FQ-20	20	68	29
FQ-30	20	90	59
FQ-50	20	80	90

Figure 79. Lubrication Points

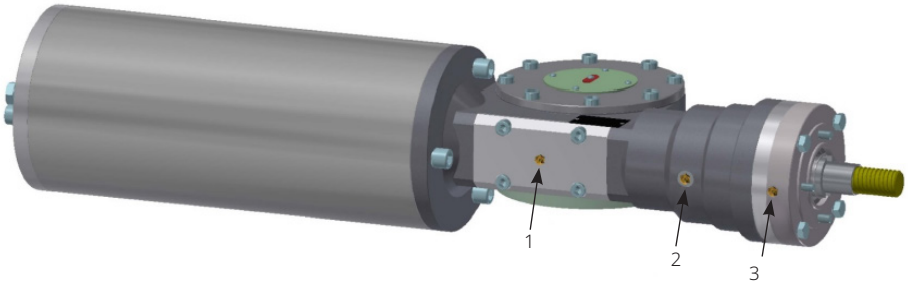

Section 17: Modes of Operation

17.1 Fail-Safe FQ-03 and FQ-06

Table 44. On-Off and Inching Operation

FQ-03	FQ-06
S2 - 15 minutes according to IEC 60034	S2 - 15 minutes according to IEC 60034
1 to 72 RPM	1 to 72 RPM
M_{max} = 300 Nm	M_{max} = 600 Nm
M_{avg} = 150 Nm	M_{avg} = 300 Nm

Table 45. Modulating Operation

FQ-03	FQ-06
S4 - 1,200 c/h - maximum 50% DC according to IEC 60034	S4 - 1,200 c/h - maximum 50% DC according to IEC 60034
1 to 36 RPM	1 to 36 RPM
M_{max} = 300 Nm	M_{max} = 600 Nm
M_{avg} = 150 Nm	M_{avg} = 300 Nm

Table 46. Continuous Modulating Operation

FQ-03	FQ-06
S9 - 1,800 c/h according to IEC 60034	S9 - 1,800 c/h according to IEC 60034
1 to 20 RPM	1 to 20 RPM
M_{max} = 300 Nm	M_{max} = 600 Nm
M_{avg} = 100 Nm	M_{avg} = 200 Nm

17.2 Fail-Safe FQ-10 and FQ-20

Table 47. On-Off and Inching Operation

FQ-10	FQ-20
S2 - 15 minutes according to IEC 60034	S2 - 15 minutes according to IEC 60034
1 to 60 RPM	1 to 60 RPM
M_{max} = 1,000 Nm	M_{max} = 2,000 Nm
M_{avg} = 300 Nm	M_{avg} = 600 Nm

Table 48. Modulating Operation

FQ-10	FQ-20
S4 - 1,200 c/h - maximum 50% DC according to IEC 60034	S4 - 1,200 c/h - maximum 50% DC according to IEC 60034
1 to 30 RPM	1 to 30 RPM
M_{max} = 1,000 Nm	M_{max} = 2,000 Nm
M_{avg} = 500 Nm	M_{avg} = 1,000 Nm

Table 49. Continuous Modulating Operation

FQ-10	FQ-20
S9 - 1,800 c/h according to IEC 60034	S9 - 1,800 c/h according to IEC 60034
1 to 20 RPM	1 to 20 RPM
M_{max} = 1,000 Nm	M_{max} = 2,000 Nm
M_{avg} = 300 Nm	M_{avg} = 600 Nm

17.3 Fail-Safe FQ-30 and FQ-50

Table 50. On-Off and Inching Operation

FQ-30	FQ-50
S2 - 15 minutes according to IEC 60034	S2 - 15 minutes according to IEC 60034
1 to 60 RPM	1 to 60 RPM
M_{max} = 3,000 Nm	M_{max} = 5,000 Nm
M_{avg} = 900 Nm	M_{avg} = 1,500 Nm

Table 51. Modulating Operation

FQ-30	FQ-50
S4 - 1,200 c/h - maximum 50% DC according to IEC 60034	S4 - 1,200 c/h - maximum 50% DC according to IEC 60034
1 to 30 RPM	1 to 30 RPM
M_{max} = 3,000 Nm	M_{max} = 5,000 Nm
M_{avg} = 1,500 Nm	M_{avg} = 2,500 Nm

Table 52. Continuous Modulating Operation

FQ-30	FQ-50
S9 - 1,800 c/h according to IEC 60034	S9 - 1,800 c/h according to IEC 60034
1 to 20 RPM	1 to 20 RPM
M_{max} = 3,000 Nm	M_{max} = 5,000 Nm
M_{avg} = 900 Nm	M_{avg} = 1,500 Nm

Section 18: Technical Data and Certifications

18.1 Binary Outputs

Figure 80. Control Unit

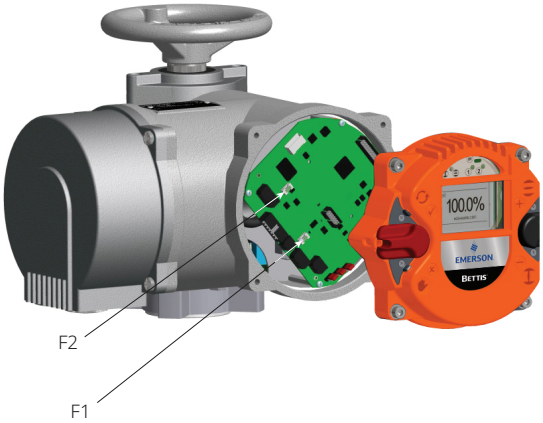

Figure 81. Logic Board

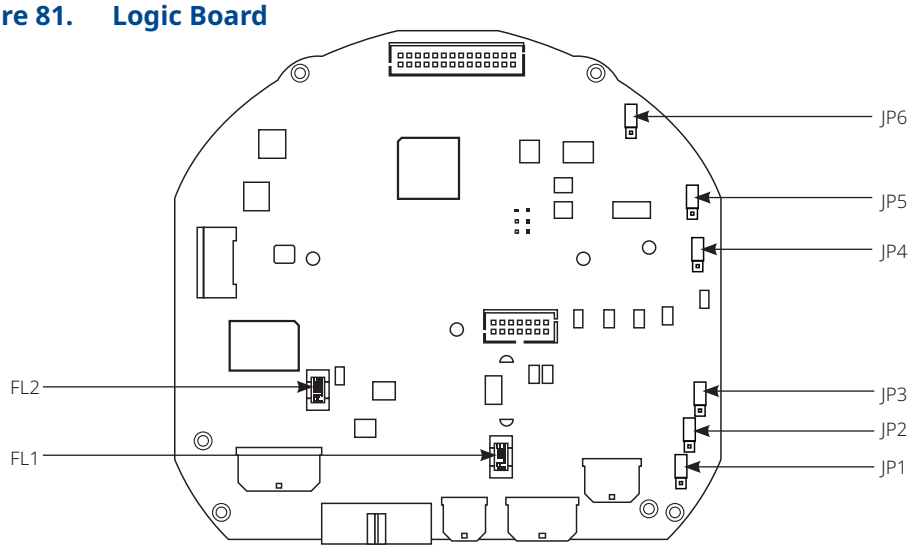

Table 53. Binary Outputs

Characteristic	Value
Count	8
Power supply	24 V DC nominal range: 11 to 35 V DC (either from internal or external)
Max voltage drop at set output	1 V
Output voltage at non-set output	<1 V
Maximum current per output	500 mA (short circuit proof)
Maximum permissible total current for all outputs	4 A
Fuse (Fuse FL2, see Figure 76)	4 A slow (Littelfuse 454 NANO² Slo-Blo)

Binary outputs with external supply are separated from other controllers via optocouplers.

18.2 Binary Inputs

Table 54. Binary Inputs

Characteristic	Value
Count	5
Nominal voltage	24 V DC towards common ground
Threshold voltage for input set	>10 V maximum (8.5 V typical)
Threshold voltage for input not set	<17 V (8.5 V typical)
Maximum voltage	30 V DC
Current consumption at 24 V DC	10.5 mA typical

Binary inputs are separated from other controllers via optocouplers.

Figure 82. Current/Voltage Relation

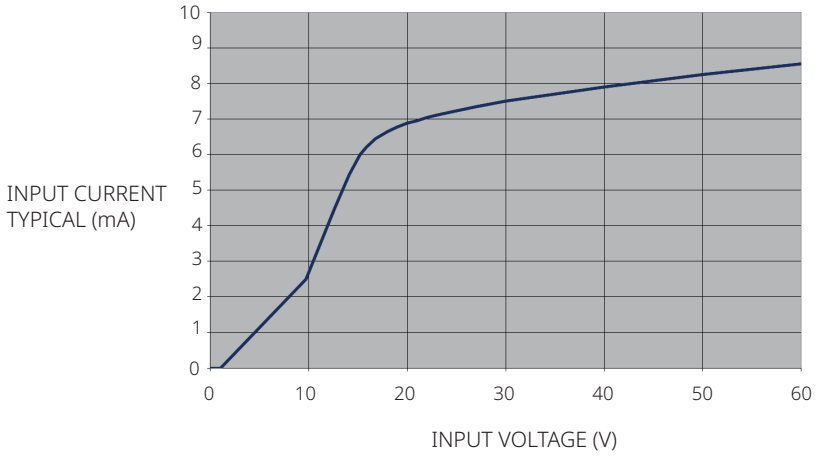

Jumpers JP1 - JP3 can be used to interconnect the binary inputs to groups with separate earths.

Figure 83. 5 Inputs with Same Common

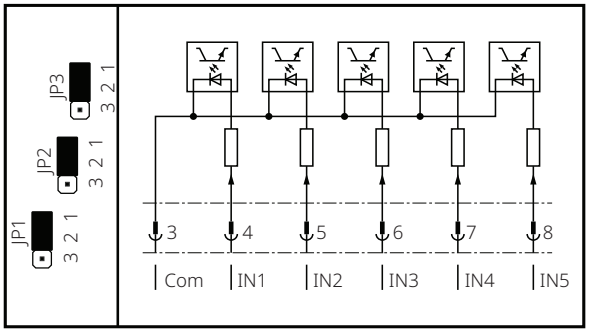

Figure 84. 2 Separated Groups of 2 Inputs with Same Ground Input IN3 is Disabled

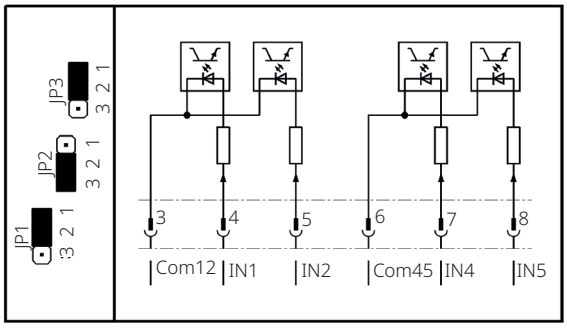

Figure 85. 3 Separated Inputs; Inputs IN2 and IN4 are Disabled

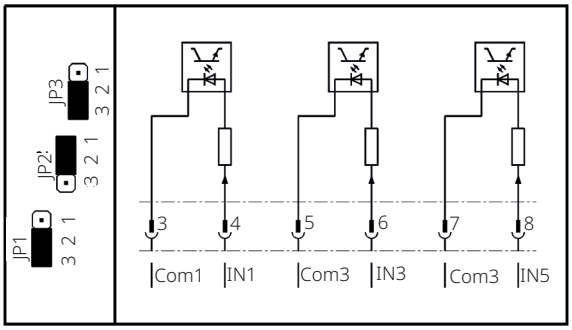

Figure 86. 3 Inputs with Same Common and 1 Separated Input IN4 is Disabled

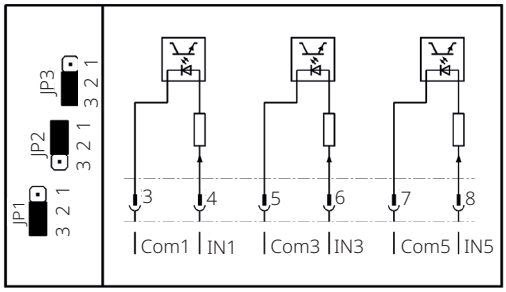

Figure 87. 1 Separated Input and 3 Inputs with Same Common Input IN2 is Disabled

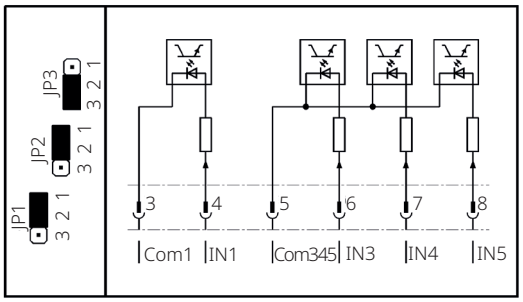

Figure 88. 5 inputs with Common = "-" Using External 24 V

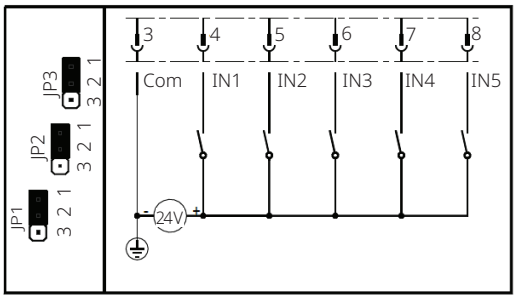

Figure 89. 5 Inputs with Common = "-" Using Internal 24 V (e.g., for dry contacts)

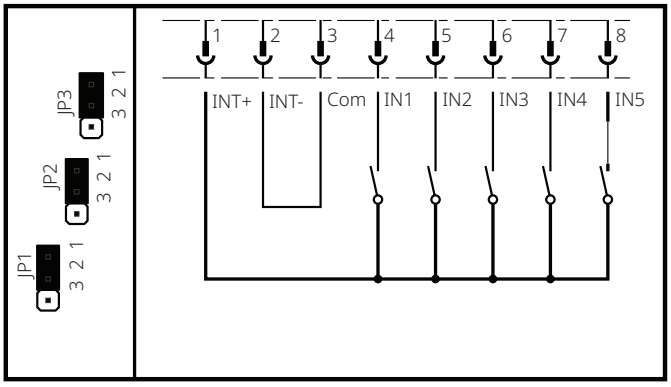

Figure 90. 3 Separated Inputs Using 3 Separated External 24 V

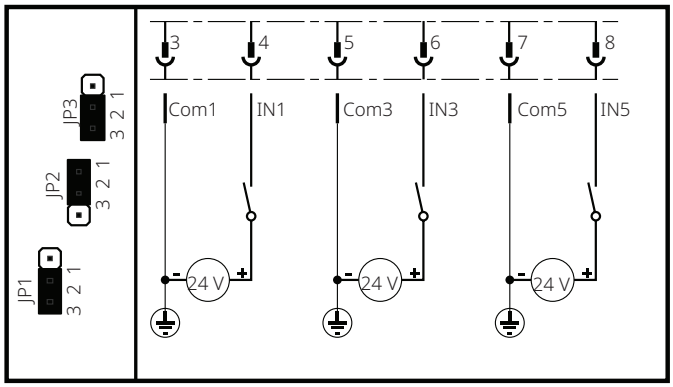

Figure 91. 3 Separated Inputs with Common = "+" Using External 24 V

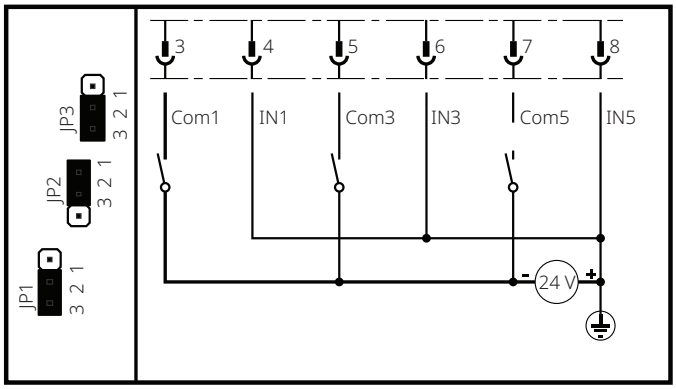

18.3 Analog Inputs

Table 55. Input 1: Setpoint Value

Characteristic	Value
Current range	0 to 25 mA
Resolution	14 Bit
Accuracy	0.5%
Input resistance	60 Ω

Analog input 1 is electrically isolated from the rest of the electronic system.

Table 56. Input 2: External Actual Value Only in Conjunction with the PID-Controller

Characteristic	Value
Current range	0 to 20.8 mA
Resolution	12 Bit
Accuracy	0.5%
Input resistance	120 Ω

Jumper JP6 can be used to switch analog input 2 from a passive input (default) to an input with internal 24 V power supply (for 4 to 20 mA, two-wire transmitters).

Figure 92. Passive Input (Default)

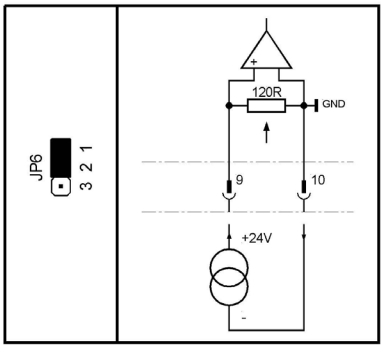

Figure 93. Input with Internal Supply (Active Input)

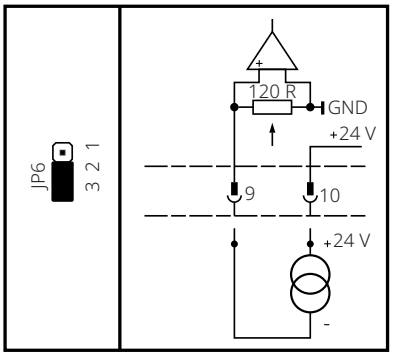

NOTE:

The analog input 2 is referenced to common of the electronic system and the auxiliary power supply.

18.4 Analog Output

Table 57. Analog Output

Characteristic	Value
Current range	0 to 20.8 mA
Resolution	12 Bit
Accuracy	0.5%
Input resistance	600 Ω

The analog output is galvanically isolated from the rest of the electronic system.

Jumper JP4 can be used to switch the analog output from an active power source (default) to a current sink, allowing the output to simulate a 4 to 20 mA, two-wire transmitter.

Figure 94. Current Source

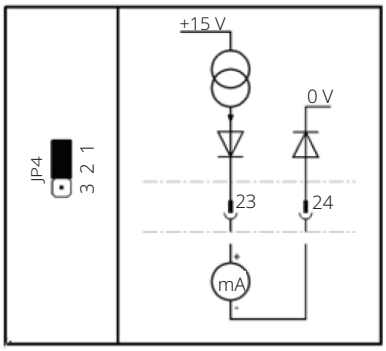

Figure 95. Current Sink

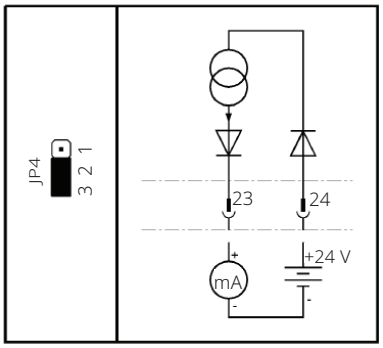

Ground potential is the potential of the control unit and the auxiliary supply.

18.5 Auxiliary Voltage Input and Output

Table 58. Auxiliary Voltage Input and Output

Characteristic	Value
Input voltage range (auxiliary voltage input)	20 to 30 V DC
Maximum current consumption (auxiliary voltage input)	500 mA
Maximum current consumption in power-save mode (auxiliary voltage input)	120 mA
Output voltage (auxiliary voltage output)	typical 23 V
Maximum output current (auxiliary voltage output)	200 mA
Resistance of common ground vs earth	typical 500 kΩ
Resistance of common ground vs earth (floating version)	> 10 mΩ
Capacitance of common ground vs earth	typical 100 nF
Maximum allowed voltage of common ground vs earth	maximum 40 V
Fuse (Fuse FL1, see Figure 76)	1 A slow (Littelfuse 454 NANO² Slo-Blo slow)

Ground potential is the common ground of the controller and the analog inputs and outputs.

The auxiliary voltage output can be set in menu P6.5 (see Section 8.5).

The power-save mode is defined as follows:

- No power supply (the controller is powered exclusively through the 24 V auxiliary voltage input).
- The backlight of the LCD display switches off automatically.
- No additional hardware options included (Profibus Interface, DeviceNet interface, relay board, etc).
- Binary outputs and the mA output are not enabled; when activating, the respective currents must be added to the total current consumption.

18.6 Connections

18.6.1 Connections for Non-Explosion Proof Version

Table 59. Non-Explosion Proof Connections

Connection	Value
Power/motor	Industrial plug with 6 pins Screw connection 16 A, maximum 2.5 mm^2, AWG14
Control signals	Industrial plug with 24 pins Screw connection 16 A, maximum 2.5 mm^2, AWG14

Optionally, contacts are available in crimp or cage clamp designs.

18.6.2 Connections for Explosion Proof Version

Table 60. Explosion Proof Connections

Connection	Value
Power/motor	Terminals with screw connection 16 A, 0.5 to 4 mm^2, AWG20 - AWG12
Control signals	Terminals with screw connection 4 A, 0.5 to 2.5 mm^2, AWG20 - AWG14

18.7 Miscellaneous

Table 61. Miscellaneous

Characteristic	Value
Ambient temperature	-
Non-explosion proof version	-25 to +60 °C
Explosion proof version	-20 to +40 °C (according to EN 60079-0)
Ex version with extended temperature range	-40 to +60 °C
Protection according to EN 60529	IP67
Standard color	RAL 7012

NOTE:
If the actuator is exposed to excessive UV-light, color deviations of the painting might occur.

Section 19: Characteristic Curves

19.1 Characteristic Curves - CM32

Figure 96. Current Draw of the Standard Version

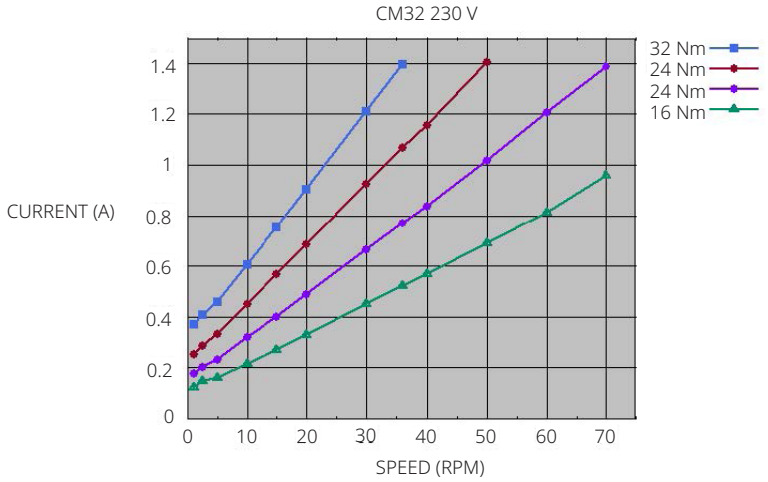

Figure 97. Current Draw of the 24 V DC Version

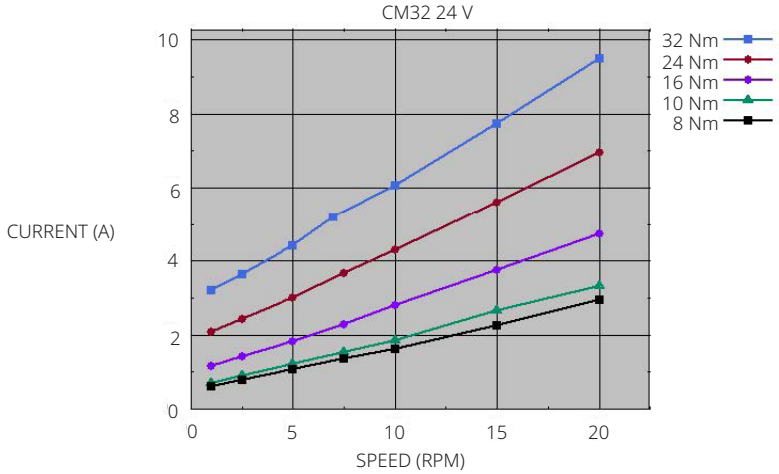

Figure 98. Current Draw of the Standard Version

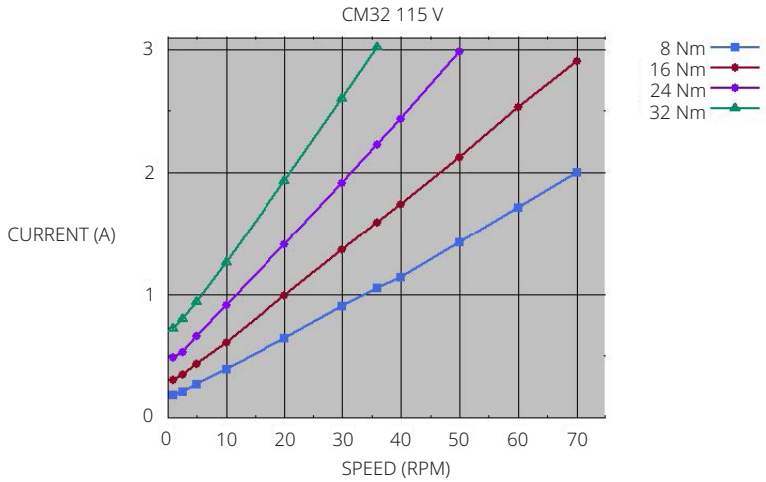

19.2 Characteristic Curves - CM64

Figure 99. Current Draw of the Standard Version

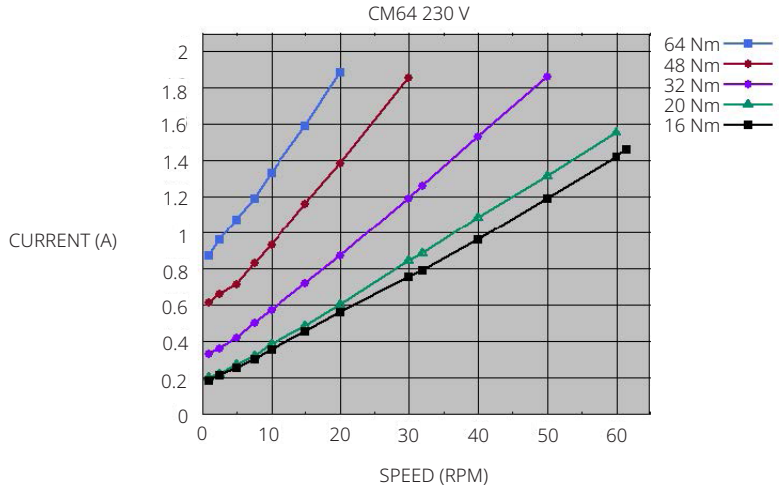

Figure 100. Current Draw of the Standard Version

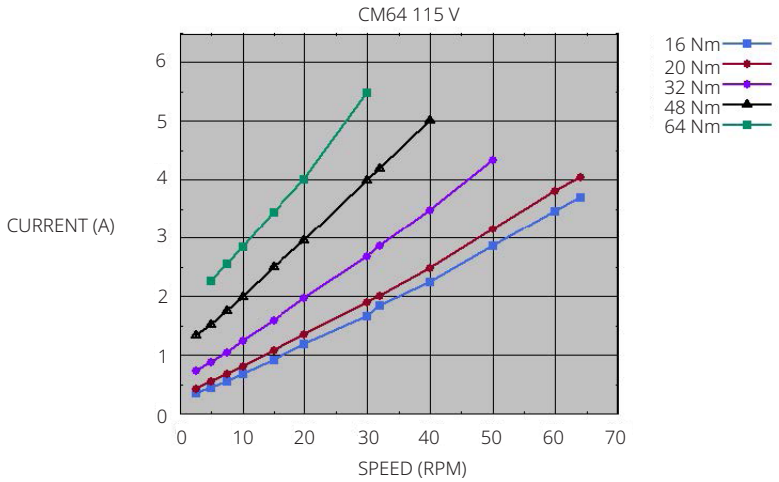

Appendix A: Handwheel Force

Table 62. Required Force on the Handwheel

Type	Emerson Type	Maximum Actuators Torque		Maximum Handwheel Torque		Handwheel diameter (Nm)	Maximum Force	
		In fail-safe direction (Nm)	Counter fail-safe direction (Nm)	In fail-safe direction (Nm)	Counter fail-safe direction (Nm)		In fail-safe direction (N)	Counter fail-safe direction (N)
CM03FSQT30	FQ03	8	17	4	8.5	140	57.1	121.4
CM03FSQT60	FQ06	8	29	4	14.5	140	57.1	207.1
CM03FSQT100	FQ10	16	64	8	32	200	80.0	320.0
CM03FSQT200	FQ20	16	57	8	28.5	200	80.0	285.0
CM03FSQT300	FQ30	16	62	8	31	200	80.0	310.0
CM03FSQT500	FQ50	16	64	8	32	200	80.0	320.0

Table 63. Revolutions on the Basic Actuator

Type	Emerson Type	Travel	Revolutions	Travel	Revolutions
		Nominal	(U)	Maximal	(U)
CM03FSQT30	FQ03	90°	16.02	100°	17.8
CM03FSQT60	FQ06	90°	15.71	100°	17.45
CM03FSQT100	FQ10	90°	9.42	100°	10.47
CM03FSQT200	FQ20	90°	31.42	100°	34.9
CM03FSQT300	FQ30	90°	39.27	100°	43.63
CM03FSQT500	FQ50	90°	60.87	100°	67.63

NOTES:
- The force on the handwheel was calculated for one-handed operation.
- With two-hand operation, the value per hand is halved.
- The maximum force may be exceeded by 20% in manual mode.

This page intentionally left blank.

www.emerson.com/bettis

BETTIS™