Installation, Operation and Maintenance Manual
VA-DC-000-1803 Rev. 2
July 2020

Bettis G01 through G10

Double-Acting Pneumatic Actuators with M18 Hydraulic Override

BETTIS™

EMERSON™

This page intentionally left blank.

Table of Contents

Section 1: Introduction

1.1 General Service Information 1
1.2 Definitions 2
1.3 General Safety Information 2
1.4 Bettis Reference Materials 3
1.5 Service Support Items 3
1.6 Lubrication and Fluid Requirements 4
1.7 General Tool Information 4
1.8 Actuator Storage 4
1.9 Actuator Installation 5
1.10 Actuator Start-Up 5
1.11 Actuator Operation 6

Section 2: Actuator Disassembly

2.1 General Disassembly 7
2.2 Pneumatic Power Module Disassembly 7
2.3 Drive Module Disassembly 10
2.4 M18 Hydraulic Override Cylinder Disassembly 12
2.5 M18 Pump Disassembly 13
2.6 M18 Reservoir Disassembly 15

Section 3: Actuator Reassembly

3.1 General Reassembly 16
3.2 Drive Module Reassembly 16
3.3 Pneumatic Power Module Reassembly 21
3.4 G2 and G3 Early Model Pneumatic Power Module Reassembly 24
3.5 M18 Hydraulic Override Cylinder Reassembly 27
3.6 M18 Pump Reassembly 29
3.7 M18 Reservoir Reassembly 31
3.8 Actuator Testing 32

Section 4: Field Conversions

4.1 Construction Reversal (Exchange Module Locations) 33

Section 5: Module Removal and Installation

5.1 Pneumatic Power Module Removal 34
5.2 Pneumatic Power Module Installation 34
5.3 M18 Hydraulic Overrides Cylinder Removal 35
5.4 M18 Hydraulic Override Cylinder Installation 36
5.5 Power Swivel Module Removal 37
5.6 Power Swivel Module Installation 38

Section 6: Actuator Support Information

6.1 Module Weights by Item Number and Actuator Housing Size 39
6.2 G01 Tool Style and Wrench Size 41
6.3 G2 Tool Style and Wrench Size..... 41
6.4 G3 Tool Style and Wrench Size..... 42
6.5 G4 Tool Style and Wrench Size..... 42
6.6 G5 Tool Style and Wrench Size..... 43
6.7 G7 Tool Style and Wrench Size..... 43
6.8 G8 Tool Style and Wrench Size..... 44
6.9 G10 Tool Style and Wrench Size 44
6.10 M18 Tool Style and Wrench Size 45

Section 7: Troubleshooting

7.1 Fault Insertion 46
7.2 Operational Test..... 47

Section 8: Removal and Decommissioning

8.1 Removal and Decommissioning 48

List of Tables

List of Tables 49

Appendix A: List of Drawings

A.1 Part No. 115680, GXXXX-H Pneumatic Assembly Drawing, Sheet 1 of 2..... 50
A.2 Part No. 115680, GXXXX-H Pneumatic Assembly Drawing, Sheet 2 of 2..... 51
A.3 Part No. VA-ED-005-1120, M18 Assembly Drawing, Sheet 1 of 7..... 52
A.4 Part No. VA-ED-005-1120, M18 Assembly Drawing, Sheet 2 of 7..... 53
A.5 Part No. VA-ED-005-1120, M18 Assembly Drawing, Sheet 3 of 7..... 54
A.6 Part No. VA-ED-005-1120, M18 Assembly Drawing, Sheet 4 of 7..... 55
A.7 Part No. VA-ED-005-1120, M18 Assembly Drawing, Remote Mounting Installation, Sheet 5 of 7..... 56
A.8 Part No. VA-ED-005-1120, M18 Assembly Drawing, Auto Reset Installation, Sheet 6 of 7 57
A.9 Part No. VA-ED-005-1120, M18 Assembly Drawing, Hydraulic Schematic, Sheet 7 of 7 58

Section 1: Introduction

1.1 General Service Information

1.1.1 This service procedure is offered as a guide to enable general maintenance to be performed on Bettis™ G01XXX-M18, G2XXX-M18, G3XXX-M18, G4XXX-M18, G5XXX-M18, G7XXX-M18, G8XXX-M18, and G10XXX M18 Double-Acting G-Series Actuators with one Pneumatic Power Module and one M18 Hydraulic Override Module.

1.1.2 Normal recommended service interval for this actuator series is five years.

NOTE:
Storage time is counted as part of the service interval.

1.1.3 This procedure is applicable with the understanding that all electrical power and pneumatic pressure has been removed from the actuator.

1.1.4 Remove all piping and mounted accessories that will interfere with the module(s) that are to be worked on.

1.1.5 This procedure should only be implemented by a technically competent technician who should take care to observe good workmanship practices.

1.1.6 Numbers in parentheses, ( ) indicate the bubble number (reference number) used on the Bettis assembly drawing and Actuator Parts List.

1.1.7 This procedure is written using the stop screw side of the housing (1 - 10) as a reference and this side will be considered the front side of the actuator. The housing cover (1 - 20) will be the top of the actuator.

1.1.8 Actuator module weights are listed in Section 6, Table 6.2.

1.1.9 When removing seals from seal grooves, use a commercial seal removing tool or a small screwdriver with sharp corners rounded off.

1.1.10 Use a non-hardening thread sealant on all pipe threads.

⚠ CAUTION

Follow manufacturer's instructions. Apply the thread sealant per the manufacturer's instructions.

1.1.11 Bettis recommends that disassembly of the actuator components should be done in a clean area on a workbench.

1.2 Definitions

⚠ WARNING

If not observed, user incurs a high risk of severe damage to actuator and/or fatal injury to personnel.

⚠ CAUTION

If not observed, user may incur damage to actuator and/or injury to personnel.

NOTE:

Advisory and information comments provided to assist maintenance personnel to carry out maintenance procedures.

1.3 General Safety Information

Products supplied by Bettis, in its “as shipped” condition, are intrinsically safe if the instructions contained within this Service Instruction are strictly adhered to and executed by well trained, equipped, prepared and competent personnel.

⚠ WARNING

Read warning messages carefully. For the protection of personnel working on Bettis actuators, this procedure should be reviewed and implemented for safe disassembly and reassembly. Close attention should be noted to the WARNINGS, CAUTIONS and NOTICE contained in this procedure.

⚠ WARNING

Follow plant safety procedures. This procedure should not supersede or replace any customer’s plant safety or work procedures. If a conflict arises between this procedure and the customer’s procedures the differences should be resolved in writing between an authorized customer's representative and an authorized Bettis representative.

1.4 Bettis Reference Materials

1.4.1 Assembly Drawing for G01-M18 through G10-M18 Double-Acting with one Pneumatic Power Module and one Hydraulic Override Module use part number VA115680.

1.4.2 M18 Manual Hydraulic Override System operating instructions part number VA-DC-000-1879 with M18 Assembly Drawing part number VA-ED-005-1120.

NOTE:

If you require a specific assembly drawing (IE: GXX-M3 OR HYD) please contact Emerson Valve Automation Bettis by phone or email at Info.Bettis@EmersonProcess.com.

1.5 Service Support Items

1.5.1 Bettis module service kits.

1.5.2 For rod extension retainer nut tool part number, refer to the following Table.

NOTE:

These tools are required only when extension rod assembly (1 - 50) or (9 - 50) is removed or when a new extension rod assembly is installed.

Table 1. G-Series Actuator Models

Actuator Model	Bettis Part Number
G01	None required
G2	123616
G3/G4	117370
G5/G7	117369
G8/G10	117368

1.5.3 Commercial leak testing solution.

1.5.4 Non-hardening thread sealant.

1.6 Lubrication and Fluid Requirements

NOTE:
Lubricants and hydraulic fluids other than those listed in step 1.6.1 and 1.6.2 should not be used without prior written approval of Bettis Product Engineering.

1.6.1 Lubricants:
Standard and high temperature services (-20 °F to +350 °F) / (-29 °C to 176 °C) use Bettis ESL-5 lubricant. ESL-5 lubricant is contained in the Bettis module service kit in tubes or cans and they are marked ESL-5 and 10 lubricant. For low temperature service (-40 °F to 150 °F) / (-40 °C to 65.6 °C) use ESL 15 lubricant. ESL 15 lubricant is contained in low temperature Bettis module service kits in tubes or cans and they are marked ESL 15 lubricant.

1.6.2 Fluids:
M18 Manual Hydraulic Override System – Standard and high temperature service (-20 °F to +350 °F) / (-29 °C to 176 °C) use Shell Tellus T-32 Automatic Transmission Fluid. Low temperature service (-40 °F to 150 °F) / (-40 °C to 65.6 °C) use Univis J13 or HVI 13 Hydraulic Fluid.

1.7 General Tool Information

1.7.1 Tools: All tools / Hexagons are American Standard inch. Large adjustable wrench, two (2) large screwdrivers, Allen wrench set, set of open/box end wrenches, rubber or leather mallet, torque wrench (up to 1,200 lb-ft / 1,627 Nm), breaker bar, small drift punch and a drive socket set. For recommended tool and wrench sizes, refer to Section 6, Tables 6.3 through 6.10.

1.8 Actuator Storage

For applications where the actuator is not placed into immediate service, it is recommended that the actuator be cycled with regulated clean/dry pneumatic pressure at least once per month. Indoor storage, if available, is recommended for all actuators. Care should be taken to plug all open ports on actuator and controls to keep out foreign particles and moisture. Actuators should not be stored in an atmosphere that is harmful to resilient seals. Contact factory for extended storage period.

1.9 Actuator Installation

1.9.1 Since there are many valve and actuator combinations, it is not practical to include detailed instructions for each type. Mountings are designed to be as simple as possible to keep the guess work out of the installation.

1.9.2 Actuators that are shipped from the factory with the travel stops adjusted for approximately ninety-degree rotation. Generally, it is necessary to make slight travel stop adjustments once the actuator is installed onto the valve. Refer to the valve manufacturer's recommendations for specific requirements. When the valve has internal stops, the actuator should be adjusted at the same points.

NOTE:

The actual "stopping" should be done by the actuator. If the valve does not have internal stops, adjust the actuator to the full open position. Using this as a reference point, rotate the valve closed and adjust to the valve manufacturer's specifications for total rotation.

1.9.3 Good instrument practices are also recommended. Clean / dry regulated pneumatic pressure is essential for long service life and satisfactory operation. It should be noted that new pneumatic lines often have scale and other debris in them and these lines should be purged of all foreign material.

NOTE:

Scale and debris can damage control valves, solenoids, and seals.

1.10 Actuator Start-Up

1.10.1 Prestart-up checks

1. Inspect to ensure the unit has been mounted onto valve properly. Gear flange mounting bolts, stem key, setscrew(s) are installed and secured.
2. No tubing damaged or accessories dislodged during the shipping or the installation.
3. Indicated position confirms valve position.
4. All switching valves in normal operating position as per SCHEMATIC / INSTRUCTIONS.

1.10.2 Check Connections

1. Pneumatic / hydraulic components connected as per schematic enclosed or in-service manual supplied.
2. Pneumatic supply connected to the identified ports.
3. Electrical connection terminals are secured.
4. Wiring as per enclosed diagram or service manual supplied.

1.10.3 When actuator is first placed into service, it should be cycled with regulated pneumatic pressure. This is necessary because the seals have been stationary, causing them to take a "set". Therefore, the actuator should be operated through several cycles to exercise the seals so as to achieve a service ready condition.

1.10.4 The actuator speed of operation is determined by a number of factors includes:

1. Power supply line length
2. Power supply line size
3. Power supply line pressure
4. Control valve and fitting orifice size
5. Torque requirements of the valve
6. Size of the actuator
7. Setting of speed controls
8. Hydraulic manual override (where available)

1.10.5 Due to the interaction of these variables, it is difficult to specify a "normal" operating time. Faster operating time may be obtained by using one or more of the following:

1. Larger supply lines
2. Larger control valve
3. Higher supply pressure *
4. Quick exhaust valves

* Not to exceed maximum operating pressure of actuator or control components

1.10.6 Slower operating time may be obtained by using flow control valves to meter the exhaust. Excessive exhaust flow metering may cause erratic operation.

1.11 Actuator Operation

1.11.1 Controlled Operation: Controlled operation is accomplished by pressurizing and/or depressurizing the appropriate cylinder inlet(s) of a Double-Acting. Do not exceed pressures indicated on actuator nameplate.

1.11.2 Manual Operation: All pressure must be vented or equalized on both sides of the pneumatic piston prior to manual operation.

Section 2: Actuator Disassembly

2.1 General Disassembly

⚠ WARNING

Dangerous gas and/or liquids. It is possible, that the actuator may contain a dangerous gas and/or liquid. Ensure that all proper measures have been taken to prevent exposure or release of these types of contaminants before commencing any work.

2.1.1 Section 2 - Actuator Disassembly is written to either completely disassemble the entire actuator or can be used to disassemble individual modules as needed (pneumatic power module or drive module, M18 Override Module or Hydraulic Override Cylinder).

2.1.2 The pneumatic power module and the hydraulic override cylinder can be disassembled while still attached to the drive module or they can be removed from the drive module and disassembled separate to the actuator (refer to Section 5 - Module Removal And Installation).

NOTE:

Use a means of capturing the hydraulic fluid that will be lost during the removal or disassembly of the hydraulic override power module. Use a bucket, tub, and large container, etc.

2.1.3 To ensure correct reassembly; that is, with pneumatic power module or M18 Hydraulic Cylinder Assembly on same end of drive module as was, mark or tag right (or left) and mark mating surfaces.

2.2 Pneumatic Power Module Disassembly

NOTE:

Review Section 2, steps 2.1.1 through 2.1.3 General Disassembly before proceeding with pneumatic power module disassembly. Refer to dwg. VA115680 for details.

⚠ WARNING

Disconnect operating pressure. If not already removed disconnect all operating pressure from actuator power cylinders.

2.2.1 Mark and record location of the ports on outer end cap (3 - 80) and inner end cap (3 - 10).

2.2.2 Refer to assembly drawing sheet 1 Detail "E". Remove two socket cap screws (3 - 130), with lock washer (3 - 140), from outer end cap (3 - 80).

2.2.3 Remove two tie bar hex nuts (3 - 90) from outboard side of outer end cap (3 - 80).

⚠ CAUTION

Do not damage O-ring groove when removing end cap.

2.2.4 The fit between cylinder (3 - 70) and outer end cap (3 - 80) is very tight. Break end cap free by tapping with a pry bar on lip provided on the end cap. Remove outer end cap (3 - 80) from cylinder (3 - 70).

NOTE:

When removing cylinder (3 - 70) of piston (3 - 30), tilt the cylinder 15 to 30 degrees with respect to actuator centerline.

2.2.5 Remove cylinder (3 - 70) from inner end cap (3 - 10).

⚠ CAUTION

Do not use pipe wrench to remove tie bars.

2.2.6 TIE BAR REMOVAL:

NOTE:

G01, G2, G3 and G4 models have flats on outboard end of tie bars (3 - 20) for wrench placement.

NOTE:

G5 through G10 models have a female square on the outboard end of tie bars (3 - 20) for wrench placement.

2.2.6.1 Remove G01 through G10 tie bars (3 - 20) as follows: Unscrew and remove tie bars (3 - 20) from inner end cap (3-10) and piston (3 - 30).

2.2.7 Remove piston as follows: (On early G2 and G3 models equipped with outboard and inboard tie bar nuts skip this step and go to step 2.2.9).

2.2.7.1 Refer to assembly drawing page 2 of 2 Detail "D". Remove two split ring halves (3 - 50) and one retainer ring (3 - 60) from outboard side of piston (3 - 30).

NOTE:
Piston (3 - 30) acts as the retainer for inboard split ring halves (3 - 50). When removing the piston be careful to not lose inboard split ring halves (3 - 50).

2.2.7.2 Remove piston (3 - 30) and two split ring halves (3 - 50) from piston rod (3 - 40).

NOTE:
Steps 2.2.8 is used only on early G2 and G3 models equipped with outboard and inboard tie bar nuts.

2.2.8 Remove early model G2 and G3 pistons as follows:

2.2.8.1 Refer to assembly drawing page 2 of 2 Detail "D". Remove two split ring halves (3 - 50) and one retainer ring (3 - 60) from inboard side of piston (3 - 30).

NOTE:
Piston (3 - 30) acts as the retainer for outboard split ring halves (3 - 50).

2.2.8.2 Slide piston (3 - 30) toward the inner end cap (3 - 10) until the out board split ring halves is exposed enough for removal. Remove outboard split ring halves from piston rod (3 - 40).

2.2.8.3 Remove piston (3 - 30) and two split ring halves (3 - 50) from piston rod (3 - 40).

2.2.9 Remove O-ring seal (4 - 70) from piston rod (3 - 40).

2.2.10 Remove hex cap screws (3 - 100) with lock washers (3 - 110) from housing (1 - 10).

2.2.11 Remove inner end cap (3 - 10) off of piston rod (3 - 40).

NOTE:
On early model G2 and G3 actuators remove two hex nuts (3 - 90) from housing (1 - 10). These two nuts will be loose after tie bars (3 - 20) are removed in step 2.2.6.1 and will be located in the area where the piston rod passes through the housing (1 - 10).

NOTE:
The piston rod (3 - 40) removal as outlined in step 2.2.12 is only required when the piston rod is being replaced or when the drive module is to be disassembled.

2.2.12 Unscrew and remove piston rod (3 - 40) from drive module.

2.3 Drive Module Disassembly

NOTE:
Review Section 2 steps 2.1.1 through 2.1.3 General Disassembly before proceeding with drive module disassembly. Refer to dwg. VA115680 for details.

2.3.1 If not already removed remove piston rod (3 - 40) from drive module.

2.3.2 Mark stop screws (1 - 180) left and right.

NOTE:
The setting of stop screws (1 - 180) should be checked and setting recorded before stop screws are loosened or removed. Stop screws will be removed later in this procedure. For steps 2.3.3 through 2.3.10 refer to assembly drawing sheet 2 Section A-A and Detail “J”.

2.3.3 Before removing position indicator (1 - 220), record or mark its position. Remove position indicator (1 - 220).

NOTE:
Step 2.3.4 is used only on G01, G2 and G3 drive modules. Drive modules G4 through G10 will skip steps 2.3.4 and continue with step 2.3.5.

2.3.4 Remove one vent check assembly (13) from top of housing cover (1 - 20).

2.3.5 Unscrew and remove hex cap screws (1 - 160) with lock washers (1 - 170) from yoke cover (1 - 150).

2.3.6 Remove yoke cover (1 - 150) from housing cover (1 - 20).

2.3.7 Mark and record the orientation of the position indicator assembly (1 - 140) in relation to the top of yoke (1 - 70).

2.3.8 Remove position indicator assembly (1 - 140) from top of yoke (1 - 70).

2.3.9 Remove spring pin (1 - 100) from top of yoke (1 - 70).

2.3.10 Remove hex cap screws (1 - 110), with lock washers (1 - 115) from housing cover (1 - 20).

NOTE:
Steps 2.3.11 and 2.3.12 are used only on G5, G7, G8 and G10 drive modules. Drive modules G01, G2, G3, and G4 will skip steps 2.3.11 and 2.3.12 and continue with step 2.3.13.

2.3.11 Remove hex cap screws (1 - 120), with lock washers (1 - 115), from housing cover (1 - 20).

2.3.12 Using hex cap screws (1 - 110), install into holes vacated by hex cap screws (1 - 120). Use these hex cap screws to jack the housing cover up for removal. Alternately rotate the hex cap screws clockwise until housing cover (1 - 20) is clear of housing (1 - 10).

NOTE:

G01, G2, G3 and G4 model housing cover will have cast tabs for placing prying tools to aid in cover removal.

2.3.13 Remove housing cover (1 - 20) from housing (1 - 10).

NOTE:

Groove pins (1 - 130) will remain in housing cover (1 - 20) when housing cover is removed from housing (1 - 10). Groove pins (1 - 130) should not be removed from housing cover (1 - 20) unless they are damaged and require new replacements.

2.3.14 Refer to assembly drawing sheet 2 Detail "B". Remove guide bar (1 - 90) from housing (1 - 10).

2.3.15 Remove top yoke pin thrust bearing (2 - 10) from top of yoke pin (1 - 80).

2.3.16 Rotate the arms of yoke (1 - 70) to the center position of housing (1 - 10).

2.3.17 Remove yoke (1 - 70) with yoke pin (1 - 80); guide block (1 - 30) and two yoke / guide block bushings (2 - 30), by lifting the yoke up and out of the housing (1 - 10).

2.3.18 Remove bottom yoke pin thrust bearing (2 - 10) from inside bottom of housing (1 - 10).

2.3.19 Remove yoke pin (1 - 80) by inserting 3/8" - 16 UNC screw into top of the yoke pin and pull straight up and out.

2.3.20 Remove guide block (1 - 30) from between the arms of yoke (1 - 70).

2.3.21 Remove yoke / guide block bushing (2 - 30) from top of guide block (1 - 30).

2.3.22 Remove yoke / guide block bushing (2 - 30) from the top of the lower yoke arm of yoke (1 - 70).

NOTE:

G01 model actuators skip steps 2.2.23 through 2.2.25 and continue disassembly at step 2.2.26.

2.3.23 Refer to assembly drawing sheet 2 Detail "B". Use Bettis tool part numbers 117368 (G8 / G10), 117369 (G5 / G7), 117370 (G3 / G4), or 123616 (G2) and remove retention retainer nut assemblies (1 - 60) and (9 - 60) from guide block (1 - 30).

2.3.24 Remove rod extension assemblies (1 - 50) and (9 - 50) from guide block (1 - 30).

NOTE:

Spherical washers (1 - 40) and (9 - 40) will be removed from guide block (1 - 30) when the extension rod assemblies are removed.

2.3.25 Remove the two remaining spherical washers (1 - 40) and (9 - 40) from guide block (1 - 30).

2.3.26 Unscrew and remove two stop screw nuts (1 - 190) from stop screws (1 - 180).

2.3.27 Unscrew and remove two stop screws (1 - 180) from front of housing (1 - 10).

2.3.28 Housing (1 - 10) vent check assembly removal as follows:

2.3.28.1 G01, G2 and G3 housing (1 - 10) unscrew and remove one vent check assembly (13) from the front of housing (1 - 10).

2.3.28.2 G4 through G10 housing (1 - 10) unscrew and remove two vent check assemblies (13) from the front of housing (1 - 10).

2.3.29 The following items do not need to be removed from their assembled locations unless being replaced by new items: Two yoke bearings (2 - 40 and yoke pin thrust bearing 2 - 10).

2.4 M18 Hydraulic Override Cylinder Disassembly

NOTE:

Review Section 2 steps 2.1.1 through 2.1.3 General Disassembly before proceeding with M18 Hydraulic Override Cylinder Disassembly. Refer to dwg. VA115680 for details.

⚠ WARNING

Disconnect operating pressure. If not already removed disconnect all operating pressure from actuator power cylinder.

2.4.1 Place the M18 pump control knob (25 - 200) in the auto position. Refer to VA-ED-005-1120.

NOTE:

Control knob (25 - 200) is located in front and at the bottom of the M18 pump manifold (20-10-10). Using a means of capturing the hydraulic fluid that will be lost during the following steps. Use a bucket, tub, and large container, etc. Refer to VA-ED-005-1120.

2.4.2 Remove all the piping from the M18 override cylinder outer end cap (7 - 80) and inner end cap (7 - 10).

2.4.3 Mark and record location of the ports on outer end cap (7 - 80) and inner end cap (7 - 10).

2.4.4 Remove NPT pipe plug from outer end cap (7 - 80).

2.4.5 Remove hex nuts (7 - 90), with lock washers (7 - 95), from tie bars (7 - 20).

2.4.6 Remove outer end cap (7 - 80) from cylinder (7 - 70), and tie bars (7 - 20).

2.4.7 Unscrew and remove tie bars (7 - 20) from inner end cap (7 - 10).

2.4.8 Remove cylinder (7 - 70) from inner end cap (7 - 10), piston (7 - 30) and piston rod (7 - 40).

2.4.9 Refer to assembly drawing VA115680 sheet 2 Detail "G". Remove two split ring halves (7 - 50) and one retainer ring (7 - 60) from piston rod (7 - 40).

2.4.10 Remove piston (7 - 30) from piston rod (7 - 40).

2.4.11 Remove O-ring seal (8 - 70) from piston rod (7 - 40).

2.4.12 Refer to assembly drawing VA115680 sheet 2 Detail "G". Remove two split rings (7 - 50) and one retainer ring (7 - 60) from piston rod (7 - 40).

2.4.13 Remove hex cap screws (7 -115) with lock washers (7 - 110) from inner end cap (7 - 10).

2.4.14 Remove hex nuts (7 - 105) from hex cap screws (7 - 100).

2.4.15 Remove hex cap screws (7 - 100) with lock washers (7 - 110) from inner end cap (7 - 10) and housing (1 - 10).

2.4.16 Remove inner end cap (7 - 10) off of piston rod (7 - 40).

NOTE:
The piston rod (7 - 40) removal as outlined in step 2.4.17 is only required when the piston rod is being replaced or when the drive module is to be disassembled.

2.4.17 Remove piston rod (7 - 40) from the drive module.

2.5 M18 Pump Disassembly

NOTE:
Refer dwg. VA-ED-005-1120 for details.

⚠ WARNING

Disconnect Operating Pressure. If not already removed disconnect all operating pressure from actuator power cylinder.

2.5.1 Place the M18 pump control knob (25 - 200) in the auto position. Use dwg. VA-ED-005-1120 for this Section.

NOTE:

Control knob (25 - 200) is located in front and at the bottom of the M18 pump manifold (20 - 10 - 10). Using a means of capturing the hydraulic fluid that will be lost during the following steps. Use a bucket, tub, or large container, etc.

2.5.2 Remove all the piping from the M18 override manifold (20 - 10 - 10) to the actuator and reservoir (10).

2.5.3 Remove mounting bracket (30 - 90) from the actuator.

2.5.4 Remove all counter-sunk cap screws (30 - 100) from the mounting bracket (30 - 90).

2.5.5 Remove acorn nut (25 - 450), lock washer (25 - 460), control knob (25 - 200) and control pointer (25 - 150) from the M18 override.

2.5.6 Remove socket cap screws (25 - 240) from the cover (20 - 10 - 140).

NOTE:

Note the bottom two access holes to reach socket cap screws are blocked by instruction tag (25 - 220) and will need to be removed and replaced (new instruction tag is provided in service kit).

2.5.7 Pull out quick release pin (20 - 10 - 110) from the pump handle lever (20 - 10 - 90). Remove counter-sunk cap screws (30 - 100) from the mounting bracket (30 - 90).

2.5.8 Remove socket head cap screws (20 - 10 - 100) from the back brace (20 - 10 - 130).

2.5.9 Remove pipe plug (20 - 10 - 210), spring (20 - 10 - 360) and ball (20 - 10 - 350). If the back plate (20 - 10 - 320) is not coming out, use soft mallet to gently tap the open end of stem, control valve (20 -10 - 280) in order to remove the backplate assembly and stem assembly.

NOTE:

The piston, control valve (20 - 10 - 310) is under spring tension and it will eventually pop out, user beware and find means to capture the piston (20 - 10 - 310), spring (20 - 10 - 390), washer bearing (20 - 10 - 380) and thrust bearing (20 - 10 - 370).

2.5.10 Remove flat head screw (20 - 10 - 330) from the manifold (20 - 10 - 10).

2.5.11 Remove disc, control valve (20 - 10 - 290) from the manifold (20 - 10 - 10).

2.5.12 Remove seal O-ring (20 - 20 - 40) from the manifold (20 - 10 - 10).

2.5.13 Remove seal O-ring (20 - 20 - 90) and backup ring (20 - 20 - 100) from back plate, control valve (20 - 10 - 320).

2.5.14 Remove seal O-ring (20 - 20 - 110) and backup ring (20 - 20 - 120) from piston, control valve (20 - 10 - 310).

2.5.15 Remove seal O-ring (20 - 20 - 40) and backup ring (20 - 20 - 50) from stem, control valve (20 - 10 - 280).

2.5.16 Remove pump rod (20 - 10 - 50) from pump cylinder (20 - 10 - 20).

2.5.17 Remove rod wiper (20 - 20 - 20), rod bushing (20 - 20 - 30) and polypak seal (20 - 20 - 10) from the pump cylinder (20 - 10 - 20) bore.

2.5.18 Remove retainer ring (20 - 10 - 80) from manifold (20 - 10 - 10).

2.5.19 Use 1/4 - 20 UNC socket cap screw (20 - 10 - 240) as provided in service kit to remove the pin, cylinder (20 - 10 - 60) from the manifold (20 - 10 - 10). Remove the pump cylinder (20 - 10 - 20).

2.5.20 Remove seal O-ring (20 - 20 - 40) and backup ring (20 - 20 - 50) from the pin, cylinder (20-10-60).

2.5.21 Remove seal O-ring (20 - 20 - 60) and backup ring (20 - 20 - 70) from the pump cylinder (20 - 10 -20).

2.6 M18 Reservoir Disassembly

2.6.1 Remove acorn nut (10 - 50), counter sink washer (10 - 60) and thread seal (10 - 70) from the end cap, upper (10 - 10).

2.6.2 Remove end cap, bottom (10 - 40) by tapping from the open end of center bar (10 - 30).

2.6.3 Remove seal O-ring (10 - 100) from the end cap, bottom (10 - 40).

2.6.4 Remove end cap, upper (10 - 10) from the reservoir cylinder (10 - 20).

2.6.5 Remove seal O-ring (10 - 100) from the end cap, upper (10 - 10).

Section 3: Actuator Reassembly

3.1 General Reassembly

⚠ CAUTION

Check shelf life of seals. Only new seals, which are still within the seal's expectant shelf life, should be installed into the actuator being refurbished.

3.1.1 Remove and discard all old seals and gaskets.

3.1.2 All parts should be cleaned to remove all dirt and other foreign material prior to inspection.

3.1.3 All parts should be thoroughly inspected for excessive wear, stress cracking, galling and pitting. Attention should be directed to threads, sealing surfaces and areas that will be subjected to sliding or rotating motion. Sealing surfaces of the cylinder, tie bars and piston rod must be free of deep scratches, pitting, corrosion and blistering or flaking coating.

⚠ CAUTION

Inspect parts before use. Actuator parts that reflect any of the above listed characteristics should be replaced with new parts.

3.1.4 Before installation coat all moving parts with a complete film of lubricant. Coat all seals with a complete film of lubricant, before installing into seal grooves.

NOTE:

The parts and seals used in the actuator will be assembled using lubricant as identified in Section 1, step 1.6.1 through 1.6.2.

3.2 Drive Module Reassembly

NOTE:

Review Section 3.1 General Reassembly before proceeding with drive module reassembly. Refer to dwg. VA115680 for details.

NOTE:

Drive module is to be assembled using the lubricant identified in Section 1, step 1.6.1.

3.2.1 If guide bar bearings are being replaced install new bearings into guide block (1 - 30).

NOTE:
The guide bar bearing must be pressed into guide block guide bar bore with the seam located ±5 degrees of the top or bottom centerline as shown in Section A-A.

NOTE:
G01 model actuators skip steps 3.2.2 through 3.2.13 and continue reassembly at step 3.2.14.

3.2.2 Lubricate guide block (1-30), two spherical washers (1 - 40), and one extension rod assembly (1 - 50).

3.2.3 Install one spherical washer (1 - 40) into the side of guide block (1- 30).

NOTE:
The spherical side of washer (1 - 40) will be facing to the outside of guide block (1 - 30).

3.2.4 Install second spherical washer (1 - 40) over threaded end of extension rod assembly (1 - 50).

NOTE:
The spherical side of the washer will go on the extension rod assembly facing the head of the extension rod assembly.

3.2.5 Install extension rod assembly (1 - 50) into guide block (1-30) and up against the first spherical washer (1 - 40).

3.2.6 Install extension retainer nut assembly (1 - 60) over extension rod assembly (1 - 50) and screw into guide block (1 - 30).

3.2.7 Tighten extension retainer nut assembly (1 - 60) until extension rod assembly (1 - 50) cannot move. Back off the extension retainer nut assembly (1 - 60) just enough to allow for extension rod assembly (1 - 50) to move freely.

3.2.8 Lubricate two spherical washers (9 - 40) and one extension rod assembly (9 - 50).

3.2.9 Install one spherical washer (9 - 40) into the side of guide block (1 - 30).

NOTE:
The spherical side of washer (9 - 40) will be facing to the outside of guide block (1 - 30).

3.2.10 Install second spherical washer (9 - 40) over threaded end of extension rod assembly (9 - 50).

NOTE:
The spherical side of the washer will go on the extension rod assembly facing the head of the extension rod assembly.

3.2.11 Install extension rod assembly (9 - 50) into guide block (1 - 30) and up against the first spherical washer (9 - 40).

3.2.12 Install extension retainer nut (9 - 60) over extension rod assembly (9 - 50) and screw into guide block (1 - 30).

3.2.13 Tighten extension retainer nut assembly (9 - 60) until extension rod assembly (9 - 50) cannot move. Back off the extension retainer nut assembly (9 - 60) just enough to allow for extension rod assembly (9 - 50) to move freely.

NOTE:
Consult Houston, Texas Bettis Service Coordinator for “yoke bearing, yoke pin bearing or yoke / guide block bushing installation information".

3.2.14 If the two yoke bearings (2 - 40) are being replaced, install new bearing into housing cover (1 - 20) and housing (1 - 10).

NOTE:
The yoke bearing (2-40) must be pressed into housing (1-10) and housing cover (1-20). Install the yoke bearings with the bearing seam located 45 ±5 degrees from the yoke arm slot when yoke (1-70) is rotated to its full clockwise position.

3.2.15 If the yoke pin thrust bearings (2-10) are being replaced install new bearings into housing cover (1 - 20) and housing (1 - 10).

3.2.16 Lubricate two yoke / guide block bushings (2 - 30) and install onto top and bottom sides of guide block (1 - 30).

NOTE:
The guide block (1 - 30) should be already pre-assembled with extension rod assembly and associated parts assembled in the guide block.

3.2.17 Install guide block (1 - 30), with yoke guide block bearings (2 - 30), between arms of yoke (1 - 70).

3.2.18 Install one O-ring seal (2-50) into inner diameter seal groove in the bottom of housing (1 - 10).

3.2.19 Coat the bearing surfaces of yoke (1-70) with lubricant and install into housing (1 - 10).

3.2.20 Align hole in guide block (1 - 30) with the matching holes in the two yoke/guide block bushings (2 - 30) and the slots in the arms of yoke (1 - 70).

NOTE:

The yoke pin can be held in place by installing a screw into the .375 - 16 UNC tapped hole in the upper end of yoke pin (1 - 80).

3.2.21 Install yoke pin (1 - 80) by inserting into the upper yoke arm, upper yoke / guide block bushing, guide block, lower yoke / guide block bushing, lower yoke arm and resting on lower yoke pin thrust bearing (2 - 10).

3.2.22 Install guide bar (1 - 90) into either side of housing (1 - 10) by inserting through the housing, through guide block and then insert the guide bar into the other side of housing (1 - 10).

3.2.23 Refer to assembly drawing page 2 of 2 Section A-A. Install spring pin (1 - 100) into the top of yoke (1 - 70).

3.2.24 Install position indicator assembly (1 - 140) onto the top of yoke (1 - 70) and over spring pin (1 - 100).

NOTE:

Refer to Section 2, step 2.3.7 for correct installation position.

3.2.25 Install O-ring (2 - 50) into housing cover (1 - 20).

3.2.26 Install O-ring seal (2 - 60) into housing cover (1 - 20).

3.2.27 Install housing cover (1 - 20), being careful not to damage O-ring seals (2 - 50) and (2 - 60).

3.2.28 Place lock washers (1 - 115) onto hex cap screws (1 - 110).

NOTE:

On G7 through G10 model actuators apply thread adhesive, Loctite 242, to threads of hex cap screws (1 - 110). Reference assembly drawing note number 8.

3.2.29 Install hex cap screws (1 - 110) with lock washers (1 - 115) through housing cover (1 - 20) and into housing (1 - 10).

NOTE:

Leave hex cap screws (1 - 110) finger tight - do not tighten.

3.2.30 **NOTE: Do this step only if groove pins (1 - 130) have been pulled or if the pins are being replaced.** Drive groove pins (1 - 130) through housing cover (1 - 20) and into housing (1 - 10). The groove pins should be flush with the cover.

3.2.31 Torque tighten hex cap screws (1 - 110) until a final lubricated torque, as listed in the following Table, has been achieved.

Table 2. Housing Cover Screw Quantity and Torque

Model	Qty.	Torque (±5%)		Model	Qty.	Torque (±5%)	
		lb-ft	Nm			lb-ft	Nm
G01	4	40	54	G5	8	100	136
G2	6	40	54	G7	8	100	136
G3	8	40	54	G8	12	100	136
G4	8	40	54	G10	16	100	136

NOTE:
Complete step 3.2.32 on G5 through G10 model actuators. For G01 through G4 model actuators, skip step 3.2.32 and proceed to step 3.2.33.

3.2.32 On G5 through G10 models;

3.2.32.1 Place lock washers (1 - 115) onto hex cap screws (1 - 120).

NOTE:
Hex cap screws (1 - 120) are only used as "hole" fillers and to protect threads from environment.

3.2.32.2 Install and tighten hex cap screws (1 - 120) with lock washers (1 - 115).

3.2.33 Install thrust bearing (2 - 110) onto position indicator (1 - 140).

3.2.34 Install O-ring seal (2 - 100) onto position indicator (1 - 140).

3.2.35 Install upper bearing (2 - 120) into yoke cover (1 - 150).

3.2.36 Install rod wiper (2 - 80) into yoke cover (1 - 150).

3.2.37 Install O-ring seal (2 - 70) into yoke cover (1 - 150).

3.2.38 Install yoke cover (1 - 150) onto housing cover (1 - 20) and over position indicator assembly (1 - 140).

NOTE:
During yoke cover installation be careful not to damage O-ring seal (2 - 70) and rod wiper (2 - 80).

3.2.39 Place lock washers (1 - 170) onto hex cap screws (1 - 160).

3.2.40 Install and tighten hex cap screws (1 - 160) with lock washers through yoke cover (1 - 150) and into housing cover (1 - 20).

3.2.41 Vent check assembly installation as follows:

3.2.41.1 G01, G2 and G3 housing (1 - 10) using pipe sealant install one vent check assembly (13) into the front of housing (1 - 10).

3.2.41.2 G01, G2 and G3 housing cover (1 - 20) using pipe sealant install one vent check assemble (13) into the top area of housing cover (1 - 20).

3.2.41.3 G4 through G10 housing (1 - 10) using pipe sealant install two vent check assemblies (13) into the front of housing (1 - 10).

3.2.42 **NOTE: Refer to Section 2, step 2.3.3 for correct position indicator placement.** Install position indicator (1 - 220) over the exposed shaft of position indicator assembly (1 - 140).

3.2.43 Install stop screw nuts (1 - 190) onto stop screws (1 - 180).

3.2.44 Install O-ring (2 - 90) onto stop screws (1 - 180).

3.2.45 Install two stop screws (1 - 180) into two stop screw holes on the front of housing (1 - 10).

3.2.46 Adjust both stop screws (1 - 180) back to settings recorded earlier in Section 2 at step 2.3.2.

3.2.47 Tighten both stop screw nuts (1 - 190) securely.

3.3 Pneumatic Power Module Reassembly

NOTES:

1. For early model G2 and G3 actuators with double nuts on the power module use Section 3.4 for reassembly.
2. Refer to Section 2, step 2.1.3 for the correct installation location for piston rod (3 - 40).
3. THE ACTUATOR MUST BE IN THE APPROPRIATE OVERTRAVEL POSITION. Confirm over- travel position by observing the guide block (1 - 30) is against the inner wall of housing (1 - 10).
4. Refer to dwg. VA115680 for details.

3.3.1 Lubricate piston rod (3 - 40) and insert through the side of housing (1 - 10).

3.3.1.1 G2 through G10 screw piston rod (3 - 40) onto extension rod assembly (1 - 50).

3.3.1.2 G01 screw piston rod (3 - 40) onto guide block (1 - 30).

3.3.2 Torque tighten piston rod (3 - 40) to the lubricated torque as listed in the following Table.

Table 3. Piston Rod Torque Information

Housing Model	Torque (±5%)		Housing Model	Torque (±5%)	
	lb-ft	Nm		lb-ft	Nm
G01	50	122	G5	240	325
G2	90	122	G7	240	325
G3	90	122	G8	240	325
G4	240	325	G10	240	325

3.3.3 Refer to assembly drawing page 2 of 2 Detail "C". Install one rod wiper (4 - 10) into inner end cap (3 - 10).

3.3.4 Install one rod bushing (4 - 20) into inner end cap (3 - 10).

3.3.5 Coat one Polypak seal (4 - 30) with lubricant and install, lip first, into inner end cap (3 - 10).

⚠ CAUTION

Polypak seal facing piston side. Install the Polypak seal with energizer ring facing outboard side (away from housing).

3.3.6 Install one o-ring seal (4 - 90) into seal groove located on the inboard face of inner end cap (3 - 10).

3.3.7 Install inner end cap (3 - 10) on to housing (1 - 10).

NOTE:

The pressure inlet port should be positioned in the same position as recorded in Section 2.2, step 2.2.1.

3.3.8 Place lock washers (3 - 110) onto hex cap screws (3 - 100).

3.3.9 Install hex cap screws (3 - 100), with lock washers, through housing (1 - 10) and into inner end cap (3 - 10).

3.3.10 Refer to assembly drawing page 2 of 2 Detail "D". Install one O-ring seal (4 - 70) into the seal groove in piston rod (3 - 40).

3.3.11 Apply lubricant to two sets of rod T-seal components (4 - 50).

NOTE:

The T-seal is composed of one rubber seal and two split skive-cut back-up rings.

3.3.11.1 Install two sets of rod T-seals (4 - 50) into the internal diameter seal grooves of piston (3 - 30).

3.3.11.2 Install a back-up ring on each side of the T-seal.

3.3.11.3 When installing the back-up rings, do not align the skive-cuts.

3.3.11.4 If the back-up rings are too long and the rings overlap beyond the skive- cuts, then the rings must be trimmed with a razor sharp instrument.

3.3.12 Install two split ring halves (3 - 50) into the inner most groove in piston rod (3 - 40) and retain by installing the recessed area of piston (3 - 30) onto the piston rod and over the two split ring halves (3 - 50).

3.3.13 Install two split ring halves (3 - 50) into the piston rod, in front of the piston installed in the previous step, and retain with retainer ring (3 - 60).

3.3.14 Install one O-ring seal (4 - 40) onto the outer diameter seal groove of inner end cap (3 - 10).

3.3.15 Coat one D-ring seal (4 - 60) with lubricant and install into the piston external seal groove.

NOTE:

The flat side of the D-ring seal go down into the seal groove.

3.3.16 Coat two tie bars (3 - 20) with lubricant and install by carefully pushing tie bars through piston (3 - 30) and rod T-seal (4 - 50).

3.3.17 Screw tie bars (3 - 20) into inner end cap (3 - 10) and tighten until the threads bottom out.

3.3.18 Refer to assembly drawing page 2 of 2 Detail "E". Coat two O-ring seals (4 - 80) with lubricant and install into outer end cap (3 - 80).

3.3.19 Apply lubricant to one O-ring seal (4 - 40) and install into the outer diameter O-ring groove of outer end cap (3 - 80).

3.3.20 Apply lubricant to the bore of cylinder (3 - 70).

⚠ CAUTION

If needed, when installing the cylinder, hammer on the end of the cylinder only with a nonmetallic object.

3.3.21 Install lubricated cylinder (3 - 70) over piston (3 - 30) and onto inner end cap (3 - 10). When installing the cylinder over the piston seal tilt cylinder 15° to 30° to piston rod.

3.3.22 Install outer end cap (3 - 80) over tie bars (3 -20) and into cylinder (3 - 70).

NOTE:

The pressure inlet port should be positioned in the same position as recorded in Section 2, step 2.2.1.

3.3.23 Install tie bar nuts (3 - 90) onto tie bars (3 - 20). Torque tighten tie bar nuts, alternately in 100 lb-ft / Nm increments, until a final lubricated torque, as listed in the following Table, has been achieved.

Table 4. Tie Bar Nuts

Housing Model	Torque (±5%)		Housing Model	Torque (±5%)	
	lb-ft	Nm		lb-ft	Nm
G01	120	163	G5	400	542
G2	120	163	G7	500	678
G3	150	203	G8	500	678
G4	150	203	G10	1,200	1,627

3.3.24 Install lock washers (3 - 140) onto socket cap screws (3 - 130).

3.3.25 Install and tighten socket cap screws (3 - 130), with lock washers (3 - 140), into outer end cap (3 - 80).

3.3.26 If removed, using pipe dope, install pipe plug (3 - 120) into outer end cap (3 - 80).

3.4 G2 and G3 Early Model Pneumatic Power Module Reassembly

NOTES:

1. Early G2 and G3 pneumatic power modules where equipped with tie bars that had nuts on both ends of the tie bars (3 - 20) – double nuts.
2. Refer to Section 2 step 2.1.4 for the correct installation location for piston rod (3 - 40).
3. THE ACTUATOR MUST BE IN THE APPROPRIATE OVERTRAVEL POSITION. Confirm over-travel position by observing the guide block (1 - 30) is against the inner wall of housing (1 - 10).
4. Refer to dwg. VA115680 for details.

3.4.1 Refer to assembly drawing page 2 of 2 Detail "C". Install one rod wiper (4 - 10) into inner end cap (3 - 10).

3.4.2 Install one rod bushing (4 - 20) into inner end cap (3 - 10).

3.4.3 Coat one Polypak seal (4 - 30) with lubricant and install, lip first, into inner end cap (3 - 10).

⚠ CAUTION

Install Polypak seal correctly. Install the Polypak seal with energizer ring facing outboard side of inner end cap (3 - 10).

3.4.4 Install piston rod (3 - 40) through inner end cap (3 - 10).

NOTE:
The piston rod end with retainer grooves to be on the outboard side of inner end cap (3 - 10).

NOTE:
Piston will be torque tighten when installed into the drive module refer to Section 5, step 5.2.5.

3.4.5 Apply lubricant to two sets of rod T-seal components (4 - 50).

NOTE:
The T-seal is composed of one rubber seal and two split skive-cut back-up rings.

3.4.5.1 Install two sets of rod T-seals (4 - 50) into the internal diameter seal grooves of piston (3 - 30).

3.4.5.2 Install a back-up ring on each side of the T-seal.

3.4.5.3 When installing the back-up rings, do not align the skive-cuts.

3.4.5.4 If the back-up rings are too long and the rings overlap beyond the skive- cuts, then the rings must be trimmed with a razor-sharp instrument.

3.4.6 Coat one D-ring seal (4 - 60) with lubricant and install into the piston external seal groove.

NOTE:
The flat side of the D-ring seal goes down into the seal groove.

3.4.7 Install piston (3 - 30) onto piston rod (3 - 40).

NOTE:
The cast rib side of the piston is to be facing away from the outboard side of inner end cap (3 - 10) or position piston (3 - 30) on the piston rod so that the retainer grooves are on the outboard side of the piston.

3.4.8 Refer to assembly drawing page 2 of 2 Detail "D". Install O-ring seal (4 - 70) into the seal groove in the outboard end of piston rod (3 - 40).

3.4.9 Install two split ring halves (3 - 50) into the outer most groove in piston rod (3 - 40) and retain by installing the recessed area of piston (3 - 30) over the two split halves (3 - 50).

3.4.10 Install two split ring halves (3 - 50) into the piston rod, in back of the piston and retain with retainer ring (3 - 60).

3.4.11 Coat two tie bars (3 - 20) with lubricant and install by carefully pushing tie bars through piston (3 - 30) and rod T-seal (4 - 50).

3.4.12 Install two tie bar O-ring seals (4 - 80) onto the inboard end of tie bars (3 - 20) and into the O-ring grooves provided.

3.4.13 Insert the tie bars through inner end cap (3 - 10) and screw hex nuts (3 - 90) onto inboard end of the tie bars.

NOTE:

Screw the tie bars through the hex nuts (3 - 90) until one complete thread is exposed.

3.4.14 Refer to assembly drawing page 2 of 2 Detail "E". Install two tie bar O-ring seals (4 - 80) onto the outboard end of tie bars (3 - 20) and into the O-ring grooves provided.

3.4.15 Apply lubricant to one O-ring seal (4 - 40) and install into the outer diameter O-ring groove of outer end cap (3 - 80).

3.4.16 Apply lubricant to the bore of cylinder (3 - 70).

⚠ CAUTION

Carefully install cylinder. If needed, when installing the cylinder, hammer on the end of the cylinder only with a nonmetallic object.

3.4.17 Install lubricated cylinder (3 - 70) over piston (3 - 30) and onto inner end cap (3 - 10). When installing the cylinder over the piston seal tilt cylinder 15° to 30° degrees to piston rod.

3.4.18 Install outer end cap (3 - 80) over tie bars (3 - 20) and into cylinder (3 - 70).

NOTE:

The pressure inlet port should be positioned in the same position as recorded in Section 2.2, step 2.2.1.

3.4.19 Install tie bar nuts (3 - 90) onto tie bars (3 - 20). Torque tighten tie bar nuts (3 - 90) as follows:

3.4.19.1 G2 model actuators torque to 120 lb-ft / 163 Nm (±5 % Percent) lubricated.

3.4.19.2 G3 model actuators torque to 150 lb-ft / 203 Nm (±5% Percent) lubricated.

3.4.20 Install lock washers (3 - 140) onto socket cap screws (3 - 130).

3.4.21 Install and tighten socket cap screws (3 - 130), with lock washers (3 - 140), into outer end cap (3 - 80).

3.4.22 Install pneumatic power module per Section 5, steps 5.2.

3.5 M18 Hydraulic Override Cylinder Reassembly

NOTE:

Review Section 3.1 General Reassembly before proceeding with the M18 Hydraulic Override Cylinder Reassembly. Refer to dwg. VA115680 for details.

NOTE:

In Section 3.5 where the step indicates to "lubricate, coat or apply fluid", use hydraulic fluid, as identified in Section 1, step 1.6.2, for lubricating the part being installed.

3.5.1 Lubricate piston rod (7 - 40) with fluid.

3.5.2 Install O-ring seal (8 - 70) into the seal groove in piston rod (7 - 40).

3.5.3 Install two split ring halves (7 - 50) into the inner most groove in piston rod (7 - 40) and retain with one retainer ring (7 - 60).

3.5.4 Install piston (7 - 30) onto piston rod (7 - 40) and up against split rings install in step 3.5.3.

3.5.5 Install two split ring halves (7 - 50) into the outer most groove in piston rod (7 - 40) and retain with one retainer ring (7 - 60).

3.5.6 Apply fluid to the bore of cylinder (7 - 70).

3.5.7 Coat one piston bearing (8 - 45) with fluid and install into the piston external seal groove.

3.5.8 Install piston (7 - 30), with piston rod (7 - 40), into cylinder (7 - 70) leave the inner most piston seal groove outside of the cylinder.

3.5.9 Coat one piston seal (8 - 60) with fluid and install into the piston external seal groove.

⚠ CAUTION

Install piston seal correctly. Install the piston seal with energizer ring facing outside edge of piston (7 - 30).

3.5.10 Push the piston through the cylinder (7 - 70) until the outboard piston seal groove is exposed.

NOTE:
To move the piston (7 - 30) through the bore of cylinder (7 - 70) may require mechanical assistance.

3.5.11 Coat one piston seal (8 - 60) with fluid and install into the piston external seal groove.

3.5.12 Refer to assembly drawing sheet 2 Detail "C". Coat Polypak seal (8 - 30) with hydraulic fluid and install; lip first, into inner end cap (7 - 10).

⚠ CAUTION

Install Polypak seal correctly. Install the Polypak seal with energizer ring facing piston side of inner end cap (7 - 10).

3.5.13 Install rod bushing (8 - 20) into inner end cap (7 - 10).

3.5.14 Install rod wiper (8 - 10) into inner end cap (7 - 10).

3.5.15 Install one O-ring seal (8 - 90) into inboard face of inner end cap (7 - 10).

3.5.16 Install inner end cap (7 - 10) onto piston rod (7 - 40).

3.5.17 Install two tie bars (7 - 20) into inner end cap (7 - 10).

NOTE:
The tie bars should be installed across from each other. Refer to the CAUTION after step 3.5.20.

3.5.18 Install one O-ring seal (8 - 40) into inboard face of outer end cap (7 - 80).

3.5.19 Install outer end cap (7 - 80) into open end of cylinder (7 - 70).

NOTE:
The pressure inlet ports of the inner and outer end caps should be positioned in the same position as recorded in Section 2, step 2.4.3.

3.5.20 Install the remaining tie bars (7 - 20) through outer end cap (7 - 80) and into inner end cap (7 - 10). Refer to the following CAUTION:

⚠ CAUTION

Install tie bars correctly. Assemble tie bars (7 - 20) into inner end cap (7 - 10) a minimum engagement of one tie bar thread diameter. Ensure that three to four threads are equally exposed beyond the tie bar nuts (7 - 90) at the outer end cap (7 - 80).

3.5.21 Install lock washers (7 - 95) onto tie bars (7 - 20) and up against outer end cap (7 - 80).

3.5.22 Install hex nuts (7 - 90) onto tie bars (7 - 20) and up against lock washers (7 - 95).

3.5.23 Torque tighten hex nuts (7 - 90) until a final lubricated torque, as listed in the following Table, has been achieved.

Table 5. Tie Bar Nuts (3 - 90)

Housing Model	Torque (±5%)		Housing Model	Torque (±5%)	
	lb-ft	Nm		lb-ft	Nm
G01	70	95	G5	385	522
G2	70	95	G7	580	786
G3	70	95	G8	580	786
G4	135	183	G10	1,000	1,356

3.5.24 Torque tighten piston rod (3 - 40) per the chart in Section 5.4, step 5.4.5.

3.5.25 Install the M18 Hydraulic Override Cylinder per Section 5, step 5.4.

3.6 M18 Pump Reassembly

NOTE:
Review Section 3.1 General Reassembly before proceeding with the M18 Hydraulic Override Cylinder Reassembly. Refer to VA-ED-005-1120 for details.

NOTE:
In Section 3.5 where the step indicates to "lubricate, coat or apply fluid", use hydraulic fluid, as identified in Section 1, step 1.6.2, for lubricating the part being installed.

3.6.1 Lubricate pump cyl (20 - 10 - 20) inside diameter with hydraulic fluid.

3.6.2 Install ppak (20 - 20 - 10), rod bushing (20 - 20 - 30) and rod wiper (20 - 20 - 20) into the pump cyl (20 - 10 - 20).

⚠ CAUTION

Install Polypak seal correctly.

3.6.3 Install seal o-ring (20 - 20 - 60) and backup ring (20 - 20 - 70) into the pump cyl (20 - 10 - 20).

3.6.4 Lubricate pin, cyl (20 - 10 - 60) with hydraulic fluid.

3.6.5 Install backup ring (20 - 20 - 50) and seal O-ring (20 - 20 - 40) onto the pin, cyl (20 - 10 - 60).

3.6.6 Install pump cyl (20 - 10 - 20) and the pin, cyl (20 - 10 - 60) into the manifold (20 - 10 - 10), note the orientation of the pump cylinder.

3.6.7 Install retnr ring (20 - 10 - 80) into the manifold to secure the pin, cyl (20 - 10 - 60).

3.6.8 Lubricate pump rod (20 - 10 - 50) with hydraulic fluid, gently install it into the pump cyl (20 - 10 - 20), note to orient it correctly.

3.6.9 Lubricate stem, cntrl vlv (20 - 10 - 280) with hydraulic fluid, install seal O-ring (20 - 20 - 40) and backup ring (20 - 20 - 50) onto the stem. Note the location of O-ring and backup ring.

3.6.10 Lubricate pstn, cntrl vlv (20 - 10 - 310) with hydraulic fluid, install seal O-ring (20 - 20 - 110) and backup ring (20 - 20 - 120) onto the piston. Note the location of O-ring and backup ring.

3.6.11 Lubricate back plt, cntrl vlv (20 - 10 - 320), seal o-ring (20 - 20 - 90) and backup ring (20 - 20 - 100) with hydraulic fluid.

3.6.12 Install seal O-ring (20 - 20 - 90) and backup ring (20 - 20 - 100) onto the back plate. Note the location of O-ring and backup ring.

3.6.13 Lubricate seal o-ring (20 - 20 - 40) and install onto the manifold (20 - 10 - 10) control valve opening. Make sure the O-ring is properly installed in its place.

3.6.14 Install disc, cntrl vlv (20 - 10 - 290) onto the manifold (20 - 10 - 10) control valve opening.

3.6.15 Apply blue Loctite 242 sparingly on the scr, flt hd (20 - 10 - 330) thread and install the disc, cntrl vlv (20 - 10 - 290) onto the manifold (20-10-10).

3.6.16 Install stem, cntrl vlv (20 - 10 - 280) together with rotor, cntrl vlv (20 - 10 - 300) and spg pin (20 - 10 - 340) into the manifold (20 - 10 - 10).

⚠ CAUTION

Install rotor at correct orientation.

3.6.17 With the stem standing out from manifold assemble facing down, install thrst brg (20 - 10 - 370), wshr, brg (20 - 10 - 380) pstn, cntrl vlv (20 - 10 - 310), spring (20 - 10 - 390) together with back plt, cntrl vlv (20 - 10 - 320) into the manifold (20 - 10 - 10).

NOTE:

The seal friction from the back plate should be able to hold against the spring tension applied.

3.6.18 Install back brace (20 - 10 - 130) onto the manifold (20 - 10 - 10) with soc hd cap screws (20 - 10 - 100).

3.6.19 Install ball (20 - 10 - 350), spring (20 - 10 - 360) and pipe plug (20 - 10 - 210) onto the manifold (20 - 10 - 10), the tension from the spring should engage the rotor assembly.

3.6.20 Install cover (20 - 10 - 140) onto the manifold (20 - 10 - 10) with soc cap screws (25 - 240).

3.6.21 Install instruction tag (25 - 220) onto the cover (20 - 10 - 140).

3.6.22 Engage quick rel. pin (20 - 10 - 110) with the pump handle lever (20 - 10 - 90).

3.6.23 Install acorn nut (25 - 450), lock washer (25 - 460), control knob (25 - 200) and control pointer (25 - 150) onto stem, control valve (20 - 10 - 280). Note orientation of knob and control pointer.

3.6.24 Install manifold (20 - 10 - 10) onto the mounting bracket (30 - 90) with csk cap screws (30 - 100).

3.6.25 Install mounting bracket (30 - 90) onto the actuator with soc hd cap screw (30 - 110) and lock washer (30 - 120).

3.6.26 Fill up reservoir (10) with hydraulic fluid, note for the G7 and above sizes, only half way is needed to prevent reservoir overflow during potential spring return.

3.6.27 Shift the control knob (25 - 200) to proper port location to operate.

3.6.28 Operate pump handle lever (20 - 10 - 90) for few cycles to move the hydraulic fluid into the manifold (20 - 10 - 10). Leave the pump handle lever at the uppermost location.

3.6.29 Disengage the quick rel. pin (20 - 10 - 110) from the pump rod (20 - 10 - 50).

3.6.30 Use 13/16 size wrench to hold the pump rod (20 - 10 - 50) from turning while loosening the pipe plug (20 - 10 - 210) with 3/16 hex wrench. Note pipe plug does not need to be removed, only loosened so air can escape.

3.6.31 Gently lower the pump rod (20 - 50) until all the air is vented out, reengage the quick rel. pin (20 - 10 - 110) in order to pump handle lever (20 - 10 - 90) for few more cycles until all the hydraulic fluid is filled in the pump system. One shall feel the proper fill during the full stroke of pump cycling.

3.6.32 Disengage the quick rel. pin (20 - 10 - 110), apply pipe dope or blue Loctite 242 onto the thread of the pipe plug (20 - 10 - 210).

3.6.33 Use 13/16 size wrench to hold the pump rod (20 - 10 - 50) from turning while tightening the pipe plug (20 - 10 - 210) with 3/16 hex wrench.

3.7 M18 Reservoir Reassembly

3.7.1 Lube up and install seal O-ring (10 - 100) onto the end cap, bottom (10 - 40).

3.7.2 Install end cap, bottom (10 - 40) from the bottom side of the reservoir cylinder (10 - 20), note the orientation of the end cap to be in alignment with the piping.

3.7.3 Lube up and install seal O-ring (10 - 100) onto the end cap, upper (10 - 10).

3.7.4 Install end cap, upper (10 - 10) from the top side of the reservoir cylinder (10 - 20), note the orientation of the breather (10 - 90) to be in the opposite side to where the piping goes into the end cap, bottom (10 - 40).

3.7.5 Install thread seal (10 - 70), counter sink washer (10 - 60) and acorn nut (10 - 50) onto the center bar (10 - 30).

3.7.6 Install all the piping from the M18 override manifold (20 - 10 - 10) to the actuator and reservoir (10).

3.8 Actuator Testing

3.8.1 Leakage Test - All pneumatic areas where leakage to atmosphere may occur are to be checked, using a commercial leak testing solution. All hydraulic connections should be pressurized and checked for leaks.

⚠ CAUTION

Do not exceed maximum pressure. Pressure applied to the actuator is not to exceed the maximum operating pressure rating listed on the actuator name tag. Test the actuator using a properly adjusted self relieving regulator, with gauge.

3.8.2 Cycle the actuator five times at the maximum operating pressure (MOP) as listed on the actuator name tag or the customer's normal actuator supply pressure. If excessive leakage across the pistons is noted, generally a bubble which breaks three seconds or less after starting to form, cycle the actuator five times as this will allow the seals to seek their proper service condition.

NOTE:

If excessive leakage across the piston remains, the actuator must be disassembled, and the cause of leakage must be determined and corrected.

3.8.3 Apply MOP pressure to the pressure port in inner end cap (3 - 10) and allow the actuator to stabilize.

3.8.4 Apply a commercial leak testing solution to the following areas:

- **3.8.4.1** Joint between inner end cap (3 - 10) and cylinder (3 - 70). This checks cylinder to inner end cap O-ring seal.
- **3.8.4.2** The port hole in the outer end cap (3 - 80). This checks the piston seal to cylinder (3 - 70), O-ring seal (4 - 70), and rod seal (4 - 50).
- **3.8.4.3** The vent check port hole in housing. This checks Polypak seal (4 - 30) that seals piston rod (3 - 40) to inner end cap (3 - 10).
- **3.8.4.4** Remove pressure from the pressure inlet port.

3.8.5 If an actuator was disassembled and repaired, the above leakage test must be performed again.

3.8.6 Shell Pressure Test – Optional pressure test could be performed on PED certified actuator by applying pressure to both sides of the piston simultaneously for a period of two (2) minutes. If any leakage occurs across a static seal, the unit must be disassembled, and the cause of leakage determined and corrected.

⚠ WARNING

PED pressure testing. The actuators main pressure bearing parts will be tested in controlled conditions in accordance with the requirement of PED by pressuring both sides of the piston to avoid damage and over torquing of the actuator components. If future testing in the field is necessary, Emerson should be contacted for guidance.

Section 4: Field Conversions

4.1 Construction Reversal (Exchange Module Locations)

4.1.1 Remove pneumatic power module per Section 5.1.

4.1.2 Remove M18 Hydraulic Override Cylinder per Section 5.3.

4.1.3 Using Section 5.1, reinstall the pneumatic power module onto the opposite end of housing (1 - 10) as it was previously located.

4.1.4 Using Section 5.3, reinstall the M18 Hydraulic Override Cylinder onto the opposite end of housing (1 - 10), as it was previously located.

4.1.5 Swap position of reservoir and manifold per section.

4.1.6 Retube as required.

Section 5: Module Removal and Installation

5.1 Pneumatic Power Module Removal

⚠ CAUTION

Refer to VA115680 for drawing details.

⚠ CAUTION

Use heavy duty support equipment. Due to the weight and size of power module, heavy duty support equipment will be required when removing power module from the actuator housing. Refer to Section 6 for pneumatic power module weights.

5.1.1 Remove all pressure connections.

5.1.2 Using lifting equipment to secure power module, remove pipe plug (3 - 120) from outer end cap (3 - 80).

5.1.3 Remove hex cap screws (3 - 100) with lock washers (3 - 110) from housing (1 - 10).

5.1.4 Using a male square drive extension, go through outer end cap (3 - 80) and unscrew piston rod (3 - 40) from the drive module housing (1 - 10).

NOTE:
When removing power module from housing (1 - 10) be careful not to lose O-ring seal (4 - 90).

5.1.5 Remove power module from actuator housing (1 - 10).

5.2 Pneumatic Power Module Installation

NOTE:
Reinstall the power module onto the opposite side of housing (1 - 10) as it was previously located.

5.2.1 Check to verify that O-ring seal (4 - 90) is properly seated in its seal groove located on the housing side of inner end cap (3 - 10).

NOTE:
G2 and G3 early models confirm that the two inboard hex nuts (3 - 90) flats are aligned to fit into the slot located in the end of housing (1 - 10).

5.2.2 Using lifting equipment move the power module up to housing (1 - 10) and install as follows: Use step 5.2.3 for G01 and step 5.2.4 for G2 through G10 actuator models.

5.2.3 G01 MODEL ACTUATORS:

5.2.3.1 Align piston rod (3 - 40) with threads in the guide block (1 - 30).

5.2.3.2 Using a male square drive extension, go through outer end cap (3 - 80) and screw piston rod (3 - 40) into guide block (1 - 30).

⚠ WARNING

Do not cross-thread piston rod. When screwing piston rod into guide block (3 - 30) make certain that the piston rod and guide block threads do not cross-thread.

5.2.4 G2 THROUGH G10 MODEL ACTUATORS:

5.2.4.1 Align piston rod (3 - 40) with extension rod assembly (1 - 50).

5.2.4.2 Using a male square drive extension, go through outer end cap (3 - 80) and screw piston rod (3 - 40) into extension rod assembly (1 - 50).

⚠ WARNING

Do not cross-thread piston rod. When screwing piston rod into extension rod assembly (1 - 50) make certain that the piston rod and extension rod assembly threads do not cross-thread.

5.2.5 Torque tighten piston rod (3 - 40) per Table 3.

5.2.6 Install lock washers (3 - 110) onto hex cap screws (3 - 100).

5.2.7 Install and tighten hex cap screws (3 - 100), with lock washers, through housing (1 - 10) and into inner end cap (3 - 10).

5.2.8 Using pipe dope, install pipe plug (3 - 120) into outer end cap (3 - 80).

5.3 M18 Hydraulic Overrides Cylinder Removal

NOTE:

Review Section 2.1 General Disassembly before proceeding with the M18 Hydraulic Overrideb Cylinder disassembly.

5.3.1 Remove O-ring plug (7 - 120) from outer end cap (7 - 80).

5.3.2 Using a male square drive extension, go through outer end cap (7 - 80); unscrew piston rod (7 - 40) from the drive module housing (1 - 10).

⚠ WARNING

Use proper lifting equipment. Use suitable lifting equipment to support the cylinder assembly.

5.3.3 Remove hex cap screws (7 - 115), with lock washers (7 - 110), from inner end cap (7 - 10).

5.3.4 Remove hex nuts (7 - 105) from hex cap screws (7 - 100).

5.3.5 Remove M18 Hydraulic Override Cylinder from actuator housing (1 - 10).

5.4 M18 Hydraulic Override Cylinder Installation

NOTE:

Review Section 3.1 General Reassembly before proceeding with M18 Hydraulic Override Cylinder installation.

5.4.1 Check to verify that O-ring seal (4 - 90) is properly seated in its seal groove located on the housing side of inner end cap (7 - 10).

5.4.2 Using lifting equipment, move the power module up to housing (1 - 10) and install as follows: Use step 5.4.3 for G01 and step 5.4.4 for G2 through G10 actuator models.

5.4.3 G01 MODEL ACTUATORS:

5.4.3.1 Align piston rod (7 - 40) with threads in the guide block (1 - 30).

5.4.3.2 Using a male square drive extension, go through outer end cap (7 - 80) and screw piston rod (7 - 40) into guide block (1 - 30).

⚠ WARNING

Do not cross-thread piston rod. When screwing piston rod into guide block (1 - 30) make certain that the piston rod and guide block threads do not cross-thread.

5.4.4 G2 THROUGH G10 MODEL ACTUATORS:

5.4.4.1 Align piston rod (7 - 40) with extension rod assembly (9 - 50).

5.4.4.2 Using a male square drive extension, go through outer end cap (7 - 80) and screw piston rod (7 - 40) into extension rod assembly (9 - 50).

⚠ WARNING

Do not cross-thread piston rod. When screwing piston rod into extension rod assembly (9 - 50) make certain that the piston rod and extension rod assembly threads do not cross-thread.

5.4.5 Torque tighten piston rod (7 - 40) per Table 3.

5.4.6 Install lock washers (7 - 110) onto hex cap screws (7 - 115).

5.4.7 Install and tighten hex cap screws (7 - 115), with lock washers, through housing (1 - 10) and into inner end cap (7 - 10).

5.4.8 Refer to assembly drawing sheet 2 Detail "F". Install lock washers (7 - 110) onto hex cap screws (7 - 100).

5.4.9 Install hex cap screws (7 - 100), with lock washers (7 - 110), through inner end cap (7 - 10) and housing (1 - 10).

5.4.10 Install and tighten hex nuts (7 - 105) onto hex cap screws (7 - 100).

5.4.11 Using pipe dope, install standard NPT pipe plug (7 - 120) into outer end cap (7 - 80). If the actuator uses SAE threads install SAE O-ring plug (7 - 120) into outer end cap (7 - 80).

5.5 Power Swivel Module Removal

NOTE:
Refer to assembly drawing sheet 2 Detail "B". X- can be 1- or 9- items as required.

5.5.1 Push the guide block to the side of housing (1 - 10) that will expose the extension rod assembly.

NOTE:
The guide block can be moved by inserting a long nonmetallic rod through the hole where the blind end cap was removed and pushing on the guide block.

5.5.2 Use Bettis tool part number as listed in chart in Section 1, step 1.2.1 to remove retainer nut assembly (X - 60) from the guide block (1 - 30).

⚠ CAUTION

Do not drop spherical washers. When removing rod extension assembly from guide block be careful not to drop one of the spherical washers inside the housing.

5.5.3 Remove rod extension assembly (X - 50) from guide block (1 - 30).

NOTE:
One spherical washer (X - 40) will be removed from guide block (1 - 30) when extension rod assembly is removed.

5.5.4 Remove the remaining spherical washer (X - 40) from guide block (1 - 30).

5.6 Power Swivel Module Installation

NOTE:
Refer to assembly drawing sheet 2 Detail "B". X- can be 1- or 9- items as required.

⚠ WARNING

Check overtravel position. The actuator must be in the appropriate overtravel position. Confirm overtravel position by observing the guide block (1 - 30) is against the inner wall of housing (1 - 10).

5.6.1 Push the guide block to the required side of the housing (1 - 10).

NOTE:
The guide block can be moved by inserting a long rod through either end of the housing and pushing on the guide block.

5.6.2 Lubricate two spherical washers (X - 40), and one extension rod assembly (X - 50).

5.6.3 Install one spherical washer (X - 40) into the side of guide block (1 - 30).

NOTE:
The spherical side of washer (X-40) will be facing to the outside of guide block (1 - 30).

5.6.4 Install second spherical washer (X - 40) over threaded end of extension rod assembly (X - 50).

NOTE:
The spherical side of the washer will go on the extension rod assembly facing the head of the extension rod assembly.

5.6.5 Install extension rod assembly (X - 50) into right of guide block (1 - 30) and up against the first spherical washer (X - 40).

5.6.6 Install extension retainer nut assembly (X - 60) over extension rod assembly (X - 50) and screw into guide block (1 - 30).

5.6.7 Tighten extension retainer nut assembly (X - 60) until extension rod assembly (X - 50) cannot move. Back off the extension retainer nut assembly (X - 60) just enough to allow for extension rod assembly (X - 50) to move freely.

Section 6: Actuator Support Information

6.1 Module Weights by Item Number and Actuator Housing Size

Table 6. Module Weight by Item Number and Actuator Housing Size

Item No.		G01 WT.	G2 WT.	G3 WT.	G4 WT.	G5 WT.	G7 WT.	G8 WT.	G10 WT.	Module Description
1	lb	83	110	162	280	545	1,025	1,495	2,550	Drive Module
	kg	38	50	73	127	247	465	678	1157	
3	lb	69	N/A	N/A	N/A	N/A	N/A	N/A	N/A	8” Dia. Power
	kg	31	N/A	N/A	N/A	N/A	N/A	N/A	N/A	
3	lb	68	80	N/A	N/A	N/A	N/A	N/A	N/A	9” Dia. Power
	kg	30.5	36	N/A	N/A	N/A	N/A	N/A	N/A	
3	lb	75	73.5	88	N/A	N/A	N/A	N/A	N/A	10” Dia. Power
	kg	34	33	40	N/A	N/A	N/A	N/A	N/A	
3	lb	86	86	104	130	N/A	N/A	N/A	N/A	12” Dia. Power
	kg	39	39	47	59	N/A	N/A	N/A	N/A	
3	lb	96	96	114	145	N/A	N/A	N/A	N/A	14” Dia. Power
	kg	44	44	51	66	N/A	N/A	N/A	N/A	
3	lb	N/A	135	145	168	295	N/A	N/A	N/A	16” Dia. Power
	kg	N/A	61	66	76	134	N/A	N/A	N/A	
3	lb	N/A	N/A	235	260	305	585	N/A	N/A	20” Dia. Power
	kg	N/A	N/A	107	118	138	265	N/A	N/A	
3	lb	N/A	N/A	N/A	340	410	735	911	N/A	24” Dia. Power
	kg	N/A	N/A	N/A	154	186	334	413	N/A	
3	lb	N/A	N/A	N/A	505	590	810	1,225	1,120	28” Dia. Power
	kg	N/A	N/A	N/A	229	268	367	556	508	
3	lb	N/A	N/A	N/A	N/A	977	1,100	1,260	1,440	32” Dia. Power
	kg	N/A	N/A	N/A	N/A	443	499	572	653	
3	lb	N/A	N/A	N/A	N/A	1243	1,400	1,525	1,755	36” Dia. Power
	kg	N/A	N/A	N/A	N/A	564	653	692	796	
3	lb	N/A	N/A	N/A	N/A	N/A	N/A	1,975	2,205	40” Dia. Power
	kg	N/A	N/A	N/A	N/A	N/A	N/A	896	1,000	
3	lb	N/A	N/A	N/A	N/A	N/A	N/A	N/A	N/A	44” Dia. Power
	kg	N/A	N/A	N/A	N/A	N/A	N/A	N/A	N/A	
3	lb	N/A	N/A	N/A	N/A	N/A	N/A	N/A	N/A	48” Dia. Power
	kg	N/A	N/A	N/A	N/A	N/A	N/A	N/A	N/A	
3	lb	N/A	N/A	N/A	N/A	N/A	N/A	N/A	N/A	52” Dia. Power
	kg	N/A	N/A	N/A	N/A	N/A	N/A	N/A	N/A	
7	lb	27	N/A	N/A	N/A	N/A	N/A	N/A	N/A	2.2” Dia. H Power Module
	kg	12.2	N/A	N/A	N/A	N/A	N/A	N/A	N/A	

Item No.		G01 WT.	G2 WT.	G3 WT.	G4 WT.	G5 WT.	G7 WT.	G8 WT.	G10 WT.	Module Description
7	lb	N/A	31	N/A	N/A	N/A	N/A	N/A	N/A	2.5” Dia. H Power Module
	kg	N/A	14.1	N/A	N/A	N/A	N/A	N/A	N/A	
7	lb	N/A	N/A	48	N/A	N/A	N/A	N/A	N/A	3.0” Dia. H Power Module
	kg	N/A	N/A	21.7	N/A	N/A	N/A	N/A	N/A	
7	lb	N/A	N/A	N/A	84	N/A	N/A	N/A	N/A	4.0” Dia. H Power Module
	kg	N/A	N/A	N/A	38	N/A	N/A	N/A	N/A	
7	lb	N/A	N/A	N/A	N/A	173	N/A	N/A	N/A	5.0” Dia. H Power Module
	kg	N/A	N/A	N/A	N/A	78	N/A	N/A	N/A	
7	lb	N/A	N/A	N/A	N/A	N/A	303	N/A	N/A	6.0” Dia. H Power Module
	kg	N/A	N/A	N/A	N/A	N/A	137	N/A	N/A	
7	lb	N/A	N/A	N/A	N/A	N/A	N/A	485	N/A	7.0” Dia. H Power Module
	kg	N/A	N/A	N/A	N/A	N/A	N/A	220	N/A	
7	lb	N/A	N/A	N/A	N/A	N/A	N/A	N/A	808	9.0” Dia. H Power Module
	kg	N/A	N/A	N/A	N/A	N/A	N/A	N/A	367	
7	lb	25.4	25.4	27.9	27.9	33.9	33.9	33.9	40.4	M18 Pump / Reservoir, empty
	kg	11.5	11.5	12.6	12.6	15.4	15.4	15.4	18.3	

6.2 G01 Tool Style and Wrench Size

Table 7. G01 Tool Style and Wrench Size

Item No.	Wrench Size	Item Qty.	Location or Description	Recommended Tool Style
1 - 110	9/16”	6	Hex Cap Screws	Socket
1 - 160	9/16”	4	Hex Cap Screws	Socket
1 - 180	3/8” sq.	2	Stop Screws	Open End or Adjustable
1 - 190	1 - 1/8”	2	Hex Jam Nuts	Open End or Adjustable
3 - 20	3/8”	2	Tie Bar (flats)	Open End or Adjustable
3 - 40	3/8” sq.	1	Piston Rod	Male Drive Extension
3 - 90	1 - 1/8”	2	Standard Hex Nuts	Socket
3 - 100	9/16”	4	Hex Cap Screws	Socket
3 - 120	5/8” sq.	1	Pipe Plug	Open End or Adjustable
3 - 130	3/16”	2	Socket Cap Screws	Allen
7 - 40	3/8” sq.	1	Piston Rod	Male Drive
7 - 90	9/16”	4	Standard Hex Nuts	Socket
7 - 100	9/16”	4	Hex Cap Screws	Socket
7 - 105	9/16”	4	Standard Hex Nuts	Socket
7 - 115	9/16”	4	Hex Cap Screws	Socket
7 - 120	9/16” sq.	1	NPT Pipe Plug	Open End or Adjustable
13	3/4”	2	Vent Check Assembly	Open End

6.3 G2 Tool Style and Wrench Size

Table 8. G2 Tool Style and Wrench Size

Item No.	Wrench Size	Item Qty.	Location or Description	Recommended Tool Style
1 - 110	9/16”	6	Hex Cap Screws	Socket
1 - 160	9/16”	4	Hex Cap Screws	Socket
1 - 180	3/8” sq.	2	Stop Screws	Open End or Adjustable
1 - 190	1 - 1/8”	2	Hex Jam Nuts	Open End or Adjustable
3 - 20	3/8”	2	Tie Bar (flats)	Open End or Adjustable
3 - 40	3/8” sq.	1	Piston Rod	Male Drive
3 - 90	1 - 1/8”	4	Standard Hex Nuts	Socket
3 - 100	9/16”	4	Hex Cap Screws	Socket
3 - 120	5/8” sq.	1	Pipe Plug	Open End or Adjustable
3 - 130	3/16”	2	Socket Cap Screws	Allen
7 - 40	3/8” sq.	1	Piston Rod	Male Drive
7 - 90	3/4”	4	Standard Hex Nuts	Socket
7 - 100	9/16”	4	Hex Cap Screws	Socket
7 - 105	9/16”	4	Standard Hex Nuts	Socket
7 - 115	9/16”	4	Hex Cap Screws	Socket
7 - 120	9/16” sq.	1	NPT Pipe Plug	Open End or Adjustable
13	3/4”	2	Vent Check Assembly	Open End

6.4 G3 Tool Style and Wrench Size

Table 9. G3 Tool Style and Wrench Size

Item No.	Wrench Size	Item Qty.	Location or Description	Recommended Tool Style
1 - 110	9/16”	8	Hex Cap Screws	Socket
1 - 160	9/16”	4	Hex Cap Screws	Socket
1 - 180	1/2” sq.	2	Stop Screws	Open End or Adjustable
1 - 190	1 - 5/16”	2	Hex Jam Nuts	Open End or Adjustable
3 - 20	1/2”	2	Tie Bar (flats)	Open End or Adjustable
3 - 40	3/8” sq.	1	Piston Rod	Male Drive
3 - 90	1 - 5/16”	4	Standard Hex Nuts	Socket
3 - 100	9/16”	6	Hex Cap Screws	Socket
3 - 120	5/8” sq.	1	Pipe Plug	Open End or Adjustable
3 - 130	3/16”	2	Socket Cap Screws	Allen
7 - 40	3/8” sq.	1	Piston Rod	Male Drive
7 - 90	3/4”	6	Standard Hex Nuts	Socket
7 - 100	9/16”	4	Hex Cap Screws	Socket
7 - 105	9/16”	4	Standard Hex Nuts	Socket
7 - 115	9/16”	4	Hex Cap Screws	Socket
7 - 120	9/16” sq.	1	NPT Pipe Plug	Open End or Adjustable
13	3/4”	2	Vent Check Assembly	Open End

6.5 G4 Tool Style and Wrench Size

Table 10. G4 Tool Style and Wrench Size

Item No.	Wrench Size	Item Qty.	Location or Description	Recommended Tool Style
1 - 110	9/16”	8	Hex Cap Screws	Socket
1 - 160	9/16”	4	Hex Cap Screws	Socket
1 - 180	3/4” sq.	2	Stop Screws	Open End or Adjustable
1 - 190	1 - 13/16”	2	Hex Jam Nuts	Open End or Adjustable
3 - 20	5/8”	2	Tie Bar (flats)	Open End or Adjustable
3 - 40	1/2” sq.	1	Piston Rod	Male Drive
3 - 90	1 - 5/8”	2	Standard Hex Nuts	Socket
3 - 100	3/4”	6	Hex Cap Screws	Socket
3 - 120	5/8” sq.	1	Pipe Plug	Open End or Adjustable
3 - 130	3/16”	2	Socket Cap Screws	Allen
7 - 40	1/2” sq.	1	Piston Rod	Male Drive
7 - 90	15/16”	6	Standard Hex Nuts	Socket
7 - 100	3/4”	4	Hex Cap Screws	Socket
7 - 105	3/4”	4	Standard Hex Nuts	Socket
7 - 115	3/4”	4	Hex Cap Screws	Socket
7 - 120	5/8” sq.	1	NPT Pipe Plug	Open End or Adjustable
13	3/4”	2	Vent Check Assembly	Open End

6.6 G5 Tool Style and Wrench Size

Table 11. G5 Tool Style and Wrench Size

Item No.	Wrench Size	Item Qty.	Location or Description	Recommended Tool Style
1 - 110	3/4”	8	Hex Cap Screws	Socket
1 - 120	3/4”	4	Hex Cap Screws	Socket
1 - 160	9/16”	6	Hex Cap Screws	Socket
1 - 180	7/8” sq.	2	Stop Screws	Open End or Adjustable
1 - 190	2 - 3/8”	2	Heavy Hex Jam Nuts	Open End or Adjustable
3 - 20	1/2” sq.	2	Tie Bar (flats)	Open End or Adjustable
3 - 40	1/2” sq.	1	Piston Rod	Male Drive
3 - 90	2”	2	Standard Hex Nuts	Socket
3 - 100	3/4”	8	Hex Cap Screws	Socket
3 - 120	1 - 1/8” sq.	1	Pipe Plug	Open End or Adjustable
3 - 130	3/16”	2	Socket Cap Screws	Allen
7 - 40	1/2” sq.	1	Piston Rod	Male Drive
7 - 90	15/16”	6	Hex Nuts	Socket
7 - 100	3/4”	4	Hex Cap Screws	Socket
7 - 105	3/4”	4	Standard Hex Nuts	Socket
7 - 115	3/4”	4	Hex Cap Screws	Socket
7 - 120	5/8” sq.	1	NPT Pipe Plug	Open End or Adjustable
13	3/4”	2	Vent Check Assembly	Open End

6.7 G7 Tool Style and Wrench Size

Table 12. G7 Tool Style and Wrench Size

Item No.	Wrench Size	Item Qty.	Location or Description	Recommended Tool Style
1 - 110	3/4”	8	Hex Cap Screws	Socket
1 - 120	3/4”	4	Hex Cap Screws	Socket
1 - 160	9/16”	8	Hex Cap Screws	Socket
1 - 180	1”	2	Stop Screws	Open End or Adjustable
3 - 20	3/4” sq.	2	Tie Bar (female square)	Open End or Adjustable
3 - 40	3/4” sq.	1	Piston Rod	Male Drive
3 - 90	2 - 3/8”	2	Standard Hex Nuts	Socket
3 - 100	15/16”	8	Hex Cap Screws	Socket
3 - 120	1 - 1/8” sq.	1	Pipe Plug	Open End or Adjustable
3 - 130	3/16”	2	Socket Cap Screws	Allen
7 - 40	3/4” sq.	1	Piston Rod	Male Drive
7 - 90	1 - 1/2”	6	Hex Nuts	Socket
7 - 100	15/16”	8	Hex Cap Screws	Socket
7 - 105	15/16”	8	Standard Hex Nuts	Socket
7 - 115	15/16”	8	Hex Cap Screws	Socket
7 - 120	15/16”	1	NPT Pipe Plug	Open End or Adjustable
13	3/4”	2	Vent Check Assembly	Open End

6.8 G8 Tool Style and Wrench Size

Table 13. G8 Tool Style and Wrench Size

Item No.	Wrench Size	Item Qty.	Location or Description	Recommended Tool Style
1 - 110	3/4”	12	Hex Cap Screws	Socket
1 - 120	3/4”	4	Hex Cap Screws	Socket
1 - 160	9/16”	8	Hex Cap Screws	Socket
1 - 180	1 - 1/4”	2	Stop Screws	Open End or Adjustable
3 - 20	3/4” sq.	2	Tie Bar (female square)	Open End or Adjustable
3 - 40	3/4” sq.	1	Piston Rod	Male Drive
3 - 90	2 - 3/4”	2	Heavy Hex Nuts	Socket
3 - 100	1 - 1/8”	8	Hex Cap Screws	Socket
3 - 120	1 - 5/16” sq.	1	Pipe Plug	Open End or Adjustable
3 - 130	3/16”	2	Socket Cap Screws	Allen
7-40	3/4” sq.	1	Piston Rod	Male Drive
7 - 90	1 - 1/2”	8	Hex Nuts	Socket
7 - 100	1 - 1/8”	8	Hex Cap Screws	Socket
7 - 105	1 - 1/8”	8	Standard Hex Nuts	Socket
7 - 115	1 - 1/8”	8	Hex Cap Screws	Socket
7 - 120	15/16”	1	NPT Pipe Plug	Open End or Adjustable
13	3/4”	2	Vent Check Assembly	Open End

6.9 G10 Tool Style and Wrench Size

Table 14. G10 Tool Style and Wrench Size

Item No.	Wrench Size	Item Qty.	Location or Description	Recommended Tool Style
1 - 110	3/4”	16	Hex Cap Screws	Socket
1 - 120	3/4”	4	Hex Cap Screws	Socket
1 - 160	9/16”	8	Hex Cap Screws	Socket
1 - 180	1 - 1/2”	2	Stop Screws	Open End or Adjustable
3 - 20	3/4” sq.	2	Tie Bar (female square)	Open End or Adjustable
3 - 40	3/4” sq.	1	Piston Rod	Male Drive
3 - 90	3 - 1/2”	2	Heavy Hex Nuts	Socket
3 - 100	1 - 5/16”	8	Hex Cap Screws	Socket
3 - 120	1 - 5/16” sq.	1	Pipe Plug	Open End or Adjustable
3 - 130	3/16”	2	Socket Cap Screws	Allen
7 - 40	3/4” sq.	1	Piston Rod	Male Drive
7-90	3 - 1/2”	8	Hex Nuts	Socket
7 - 100	1 - 1/8”	8	Hex Cap Screws	Socket
7 - 105	1 - 1/8”	8	Standard Hex Nuts	Socket
7 - 115	1 - 1/8”	8	Hex Cap Screws	Socket
7 - 120	15/16”	1	NPT Pipe Plug	Open End or Adjustable
13	3/4”	2	Vent Check Assembly	Open End

6.10 M18 Tool Style and Wrench Size

Table 15. M18 Tool Style and Wrench Size

Item No.	Wrench Size	Item Qty.
10 - 50	NUT, ACORN 3/8 - 16 UNC*HI CROWN*	5/8 Socket, Air Ratchet
20 - 10 - 210	PIPE PLUG, 3/8*5000#/SOLID* X	11/16 Socket, Air Ratchet
20 - 30	RLF VAL, KETA LRV-08-36/0207 3000 PSI	13/16 Body; 17 mm Nut; 3/16 Hex Adj. Screw
20 - 40 / 70 - 60	CHK VAL, KETA LCV-06-B-2.1	11/16 Socket, Air Ratchet
20 - 10 - 80	RTNR RING, INT 5/8, MC MSTR 99142A370	Inside Retainer Ring Pliers
30 - 100	SCR, SOC CP 3/8 - 16 UNC - 2A X 5/8	5/16 Hex Allen Wrench
20 - 10 - 120	GRV CLEVIS PIN W/ RTNR RING, 5/16 X 1 - 9/16	Retainer Ring Tool
20 - 10 - 180	PIPE PLUG, 3/8 NPT*SKT HD*	5/16 Hex Allen Wrench
20 - 10 - 190	PIPE PLUG, 1/4 NPT*SKT HD FLUSH*	1/4 Hex Allen Wrench
20 - 10 - 210	PIPE PLUG, 1/8 NPT*SKT HD FLUSH*, 7/8" TAPER	3/16 Hex Allen Wrench
20 - 10 - 240	SCR, SOC CP 1/4 - 20 UNC - 3A X 1/2	3/16 Hex Allen Wrench
20 - 260	CHK VAL, KETA LZFC-08-016-0.5	7/8 Socket
20 - 270	CHK VAL, KETA LCV-06-B-0.35	11/16 Socket
20 - 10 - 330	SCR, CSK FLT HD, 8 - 32 UNC - 1/4	Phillips Screwdriver
20 - 10 - 340	S/PIN .156 X 1.0	Drift Punch, Hammer
25 - 410	SCR, SOC CP #10 - 32 UNF - 3A X 3/8 LG	5/32 Hex Allen Wrench
25 - 430	BHCS 8 - 32 X .38	3/32 Hex Allen Wrench
25 - 440	NUT, STD HEX #8 - 32 HHS 1181CSS	11/32 Socket, Hand Ratchet
25 - 450	ACORN NUT, 5/16 - 18 UNC	9/16 Socket, Air Ratchet
20 - 20 - 10	PPAK SEAL, 12501000-250B*MOS2*	PPAK Installation Tool
20 - 20 - 20	RD WIPR, 1.000*PARKER D1000*	Rubber Mallet
20 - 10 - 170	BRG, PN M18 08DU04	Special design press pin, Dead Blow Hammer
30 - 20	SCR, HEX CP 1/4 - 20 UNC - 2A X 1/2	3/16 Hex Allen Wrench
30 - 40	SCR, SOC CP 1/4 - 20 UNC - 3A X 1	3/16 Hex Allen Wrench
30 - 50	NUT, ELASTIC STOP 1/4 - 20 UNC*316SS*	7/16 Socket
30 - 100	SCR, FLT C'SK CP 3/8 - 16 UNC X 3/4 LG	7/32 Hex Allen Wrench
30 - 110	SCR, SOC CP 1/2 - 13 UNC - 3A X 1 LG	3/8 Hex Allen Wrench

Section 7: Troubleshooting

7.1 Fault Insertion

In the unlikely event of a fault developing, the following Fault Location Table is provided to assist the service engineer to perform troubleshooting. This Table is designed to cover as wide a range of Emerson Bettis actuators as possible. Reference to equipment not supplied should be ignored.

Table 16. Fault Location Table

Symptom	Potential Causes	Remedy
Erratic movement	Irregular supply of operating medium	Check operating medium for consistent supply pressure and correct as necessary.
	Inadequate lubrication	Dismantle, relubricate and reassemble.
	Worn parts	Dismantle, visually inspect for significant wear. Actuator replacement may be required.
	Defective valve	Consult the valve OEM's documentation.
Short stroke	Incorrectly set stops (valve and /or actuator)	Check the position of the travel stops and readjust as necessary.
	Hardened grease	Dismantle, remove any hard grease, Relubricate and reassemble.
	Debris left in the cylinder or housing during maintenance	Disassemble cylinder assembly to remove debris. Reassemble cylinder assemble.
	Defective valve	Consult the valve manufacturer's documentation.
Apparent lack of torque	Inadequate supply pressure	Ensure supply pressure is above the minimum operating pressure of the actuator and that output torque produced at supply pressure exceeds valve torque demand.
	Incorrect speed control settings	Adjust speed controls to increase flow.
	Exhaust port blocked	Remove and clean the exhaust port silencers and replace.
	Pipe work blocked, crushed or leaking	Examine the pipe work for blockages, crushed pipe or leakage. Clear or replace as necessary.
	Defective controls	Examine the controls, refurbish or renew as necessary. Refer to component manufacturer's documentation.
	Defective piston seal	Dismantle the cylinder assembly, remove the defective piston seal. Fit new seal and reassemble.
	Defective rod seal	Dismantle the cylinder assembly, remove the defective rod seal. Fit new seal and reassemble.
	Defective housing seal	Dismantle the housing assembly, remove the defective seal. Fit new seal and reassemble.
	High valve torque or valve seized	Consult the valve OEM documentation.

7.2 Operational Test

7.2.1 Full Stroke Test

The “Full Stroke Test” (“On-line”) must be performed to satisfy the PFD_{AVG} (average probability of failure on demand) value. The full stroke test frequencies will be defined by the final installer to achieve the defined SIL level.

7.2.1.1 Procedure

7.2.1.1.1 Stroke the actuator/valve assembly two complete open/close cycles with complete closing of the valve.

7.2.1.1.2 Verify the open/close cycles functioned correctly (e.g. check locally, or automatically via Logic solver, the correct movement of the actuator/valve).

Upon successful completion of the above described Full Stroke Test procedure, the “Test Coverage” can be considered 99%.

7.2.2 Partial Stroke Test (when requested)

The “Partial Stroke Test” (“On-line”) can be performed to improve the PFD_{AVG} value and to satisfy PFD_{AVG} (average probability of failure on demand) value. A typical partial stroke value is 15% of the stroke and the recommended test interval is about every one to three months.

7.2.2.1 Procedure

7.2.2.1.1 Operate the actuator/valve assembly for No° 1 open/close cycles 15% of the stroke.

7.2.2.1.2 Verify the partial stroke test functioned correctly (e.g. check locally, or automatically via logic solver, or via the PST system the correct movement of the actuator / valve was 15% of the stroke).

NOTE:

The above test is only applicable on systems equipped with a partial stroke feature.

Section 8: Removal and Decommissioning

8.1 Removal and Decommissioning

⚠ WARNING

Follow proper procedure. Always follow safe work practices remove and disassemble G-Series actuator.

The below basic procedure should not supersede or replace any customer's plant safety or work procedures. If a conflict arises between this procedure and the customer's procedures, the differences should be resolved in writing between an authorized customer’s representative and an authorized Emerson/Bettis representative.

⚠ CAUTION

Isolate and power off actuator. Make sure actuator is isolated before removing from valve. Turn OFF the power medium and bleed off all pressure first, including storage tank (if present). Next, bleed off pilot pressure, disconnect pneumatic pressure supply, pilot tubing and electrical wiring (if equipped).

Before starting the disassembly, a large area should be created around the actuator so to allow any kind of movement.

Separate the parts composing the actuator according to their nature (ex. metallic, and plastic materials, fluids etc.) and send them to differentiate waste collection sites, as provided for by the laws and provisions in force.

8.1.1 Drain tanks and remove tubing from actuator. Remove accessories (if equipped) and controls from actuator.

8.1.2 Remove all equipment mounted on top of actuator (limit switches, end of stroke valve, and relevant pneumatic/electric connection, etc.)

8.1.3 Remove mounting bolts and actuator is ready to be removed from valve.

For complete actuator tear down refer to Section 2 of the manual.

List of Tables

Table 1 G-Series Models 3
Table 2 Housing Cover Screw Quantity and Torque 20
Table 3 Piston Rod Torque Information 22
Table 4 Tie Bar Nuts 24
Table 5 Tie Bar Nuts (3 - 90) 29
Table 6 Module Weight by Item Number and Actuator Housing Size 39
Table 7 G01 Tool Style and Wrench Size 41
Table 8 G2 Tool Style and Wrench Size 41
Table 9 G3 Tool Style and Wrench Size 42
Table 10 G4 Tool Style and Wrench Size 42
Table 11 G5 Tool Style and Wrench Size 43
Table 12 G7 Tool Style and Wrench Size 43
Table 13 G8 Tool Style and Wrench Size 44
Table 14 G10 Tool Style and Wrench Size 44
Table 15 M18 Tool Style and Wrench Size 45
Table 16 Fault Location Table 46

Appendix A: List of Drawings

A.1 Part No. 115680, GXXXX-H Pneumatic Assembly Drawing, Sheet 1 of 2

⚠ CAUTION

Latest drawings can be required from Emerson.

Figure A-1

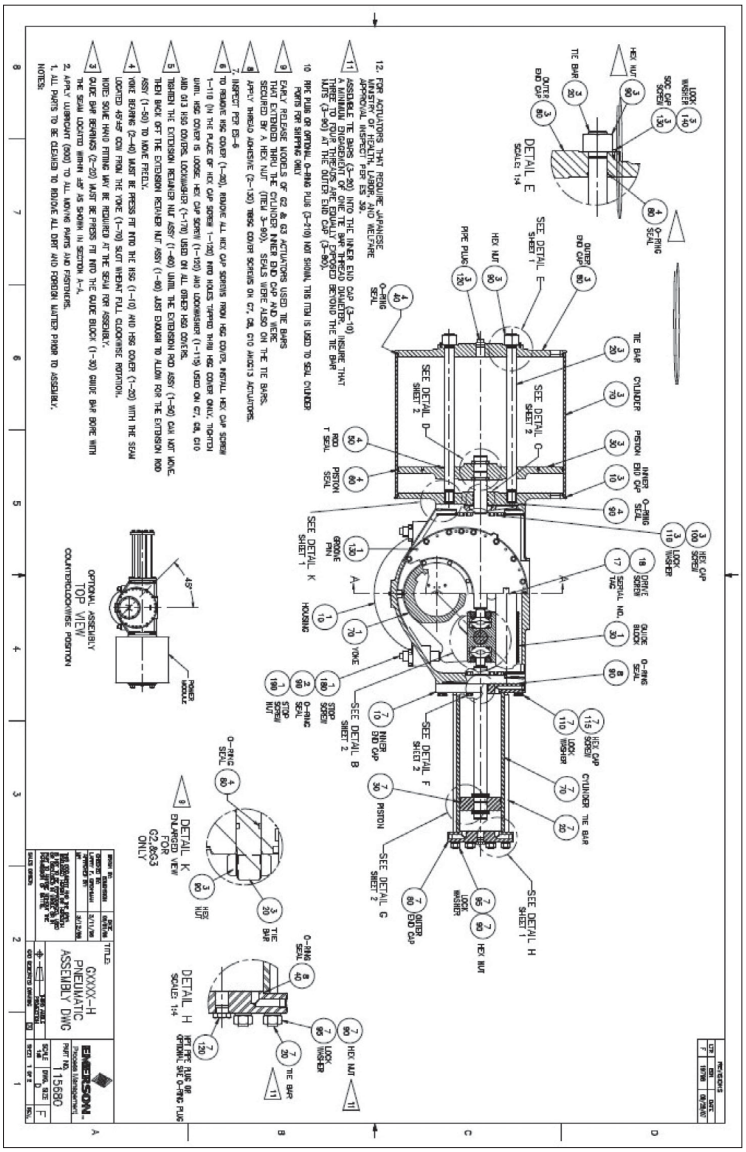

A.2 Part No. 115680, GXXXX-H Pneumatic Assembly Drawing, Sheet 2 of 2

Figure A-2

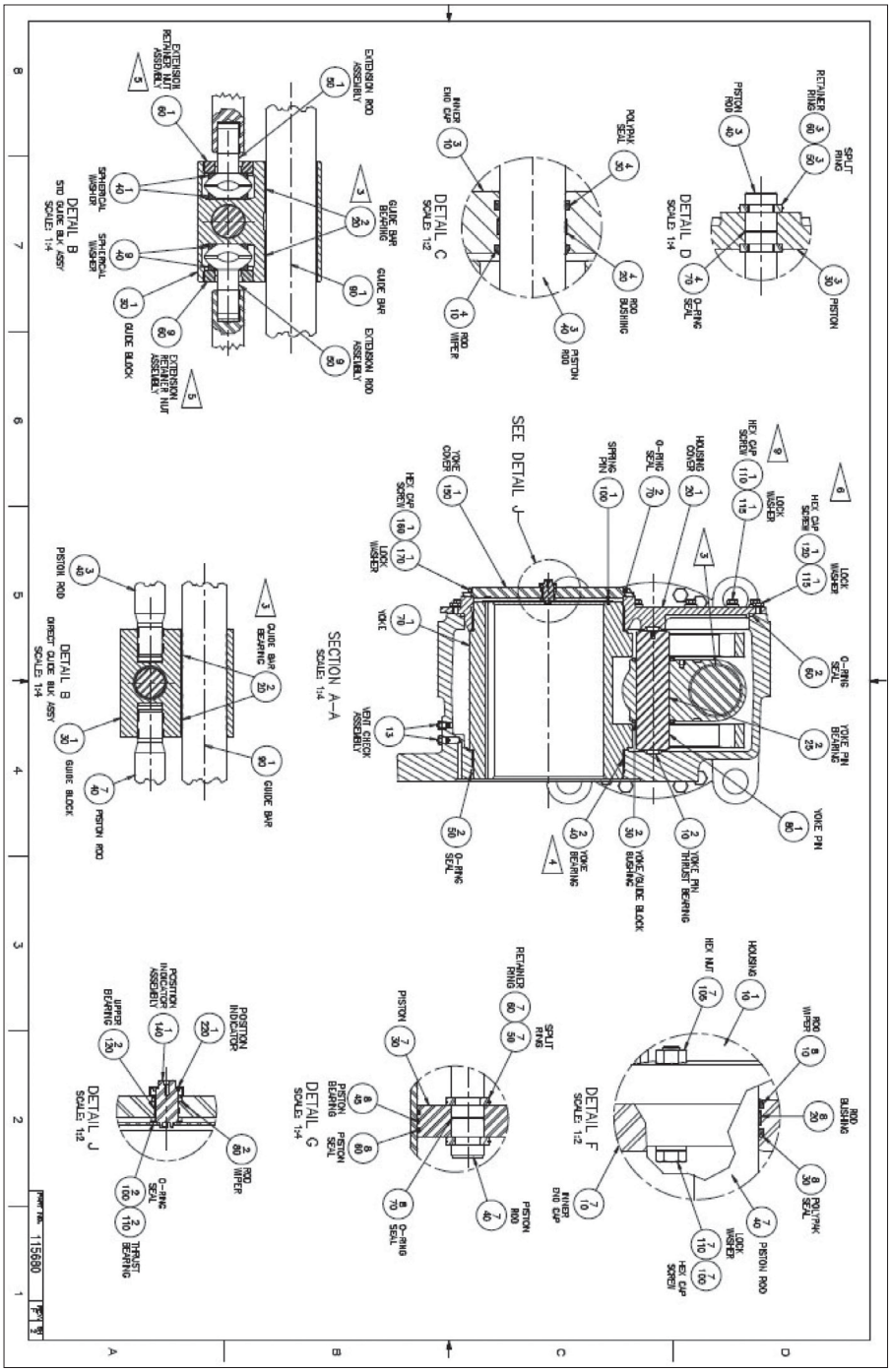

A.3 Part No. VA-ED-005-1120, M18 Assembly Drawing, Sheet 1 of 7

Figure A-3

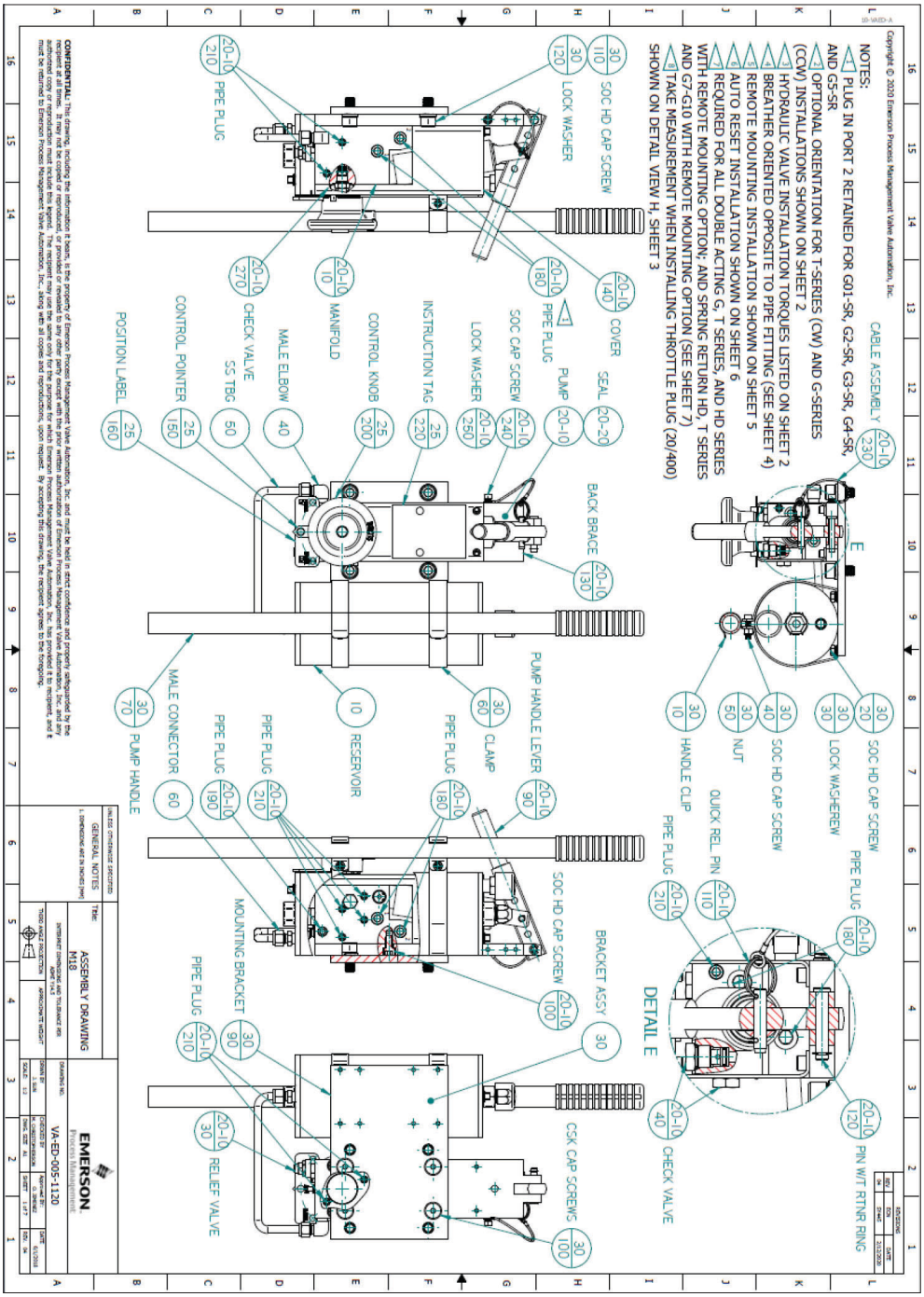

A.4 Part No. VA-ED-005-1120, M18 Assembly Drawing, Sheet 2 of 7

Figure A-4

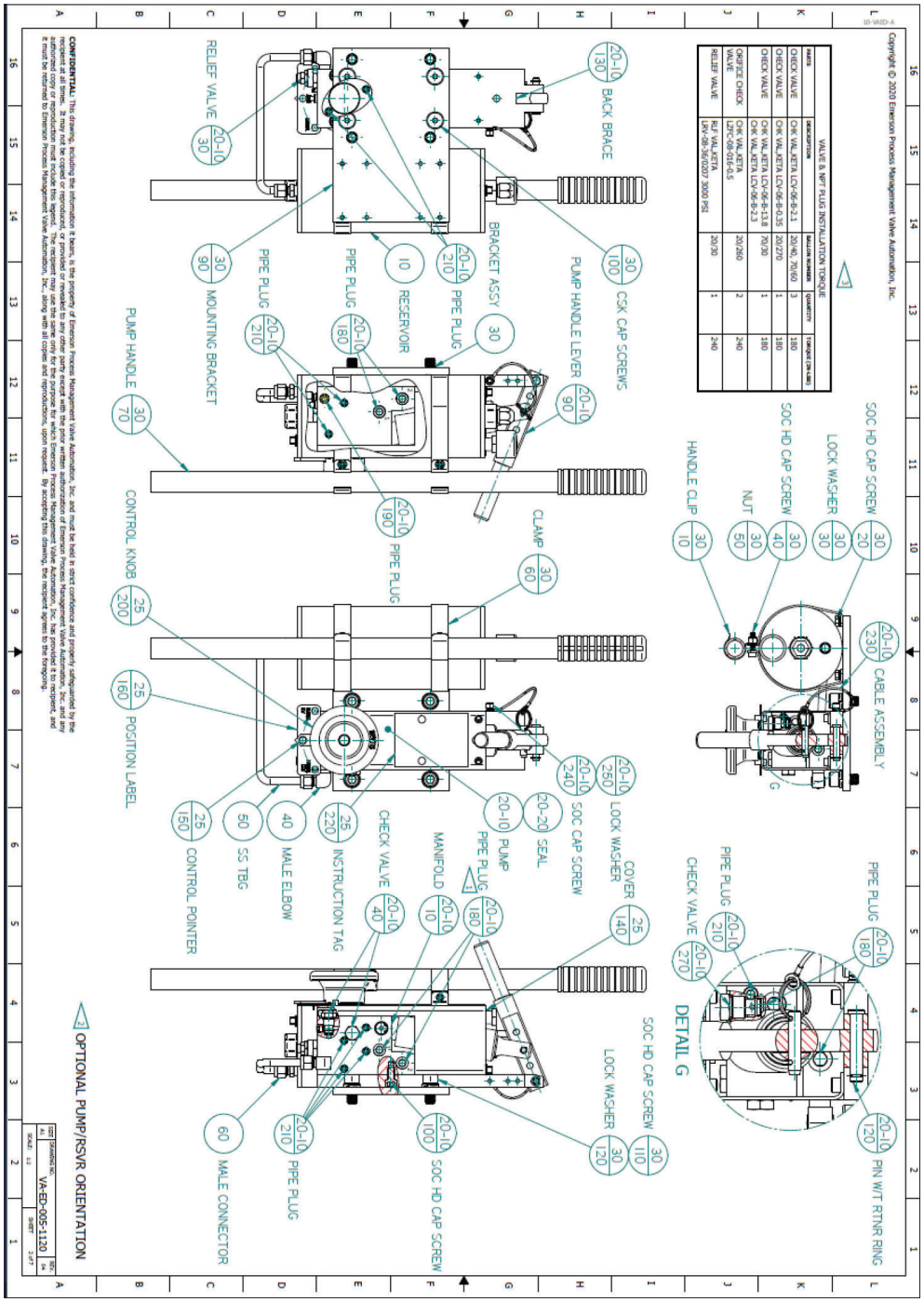

A.5 Part No. VA-ED-005-1120, M18 Assembly Drawing, Sheet 3 of 7

Figure A-5

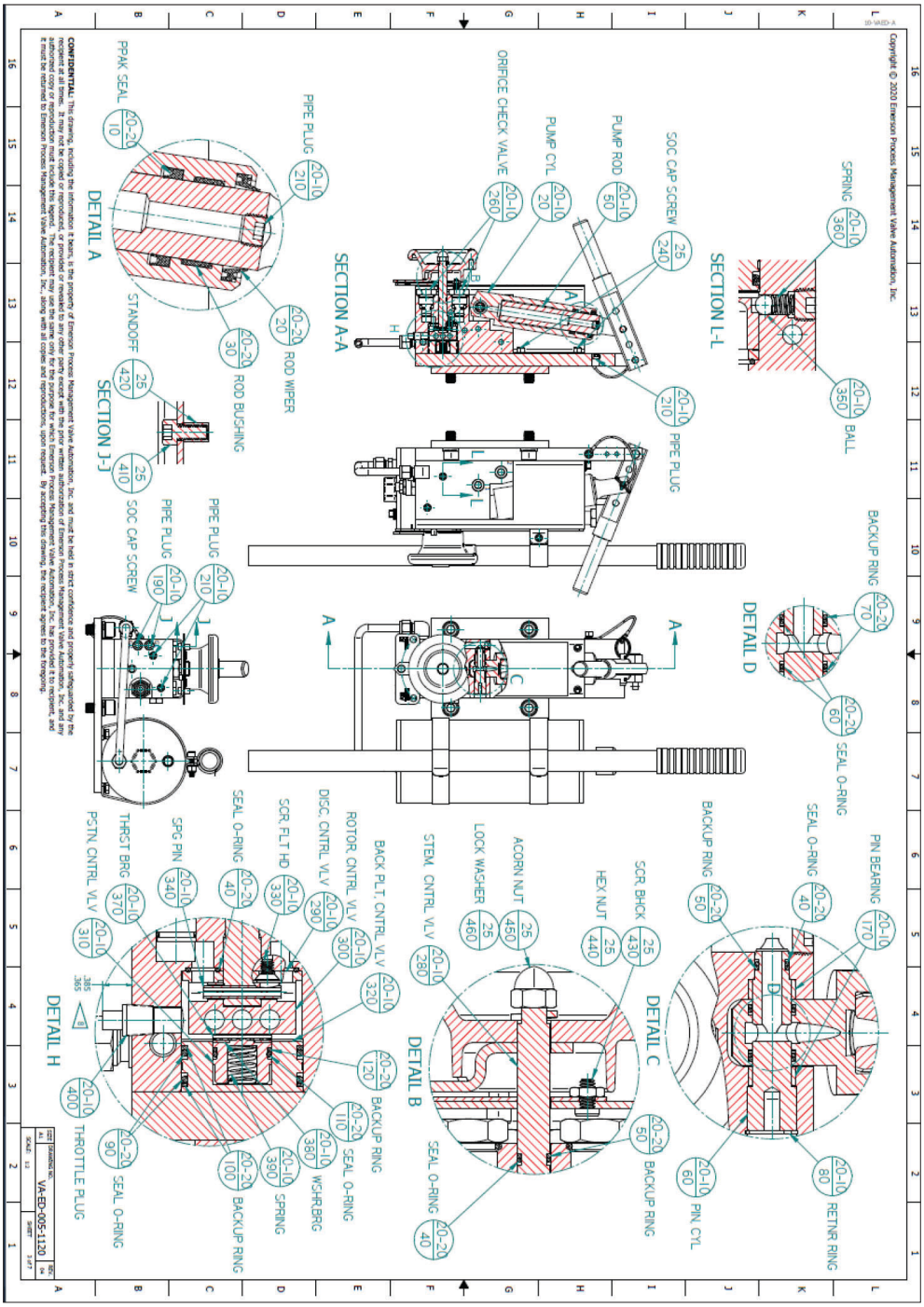

A.6 Part No. VA-ED-005-1120, M18 Assembly Drawing, Sheet 4 of 7

Figure A-6

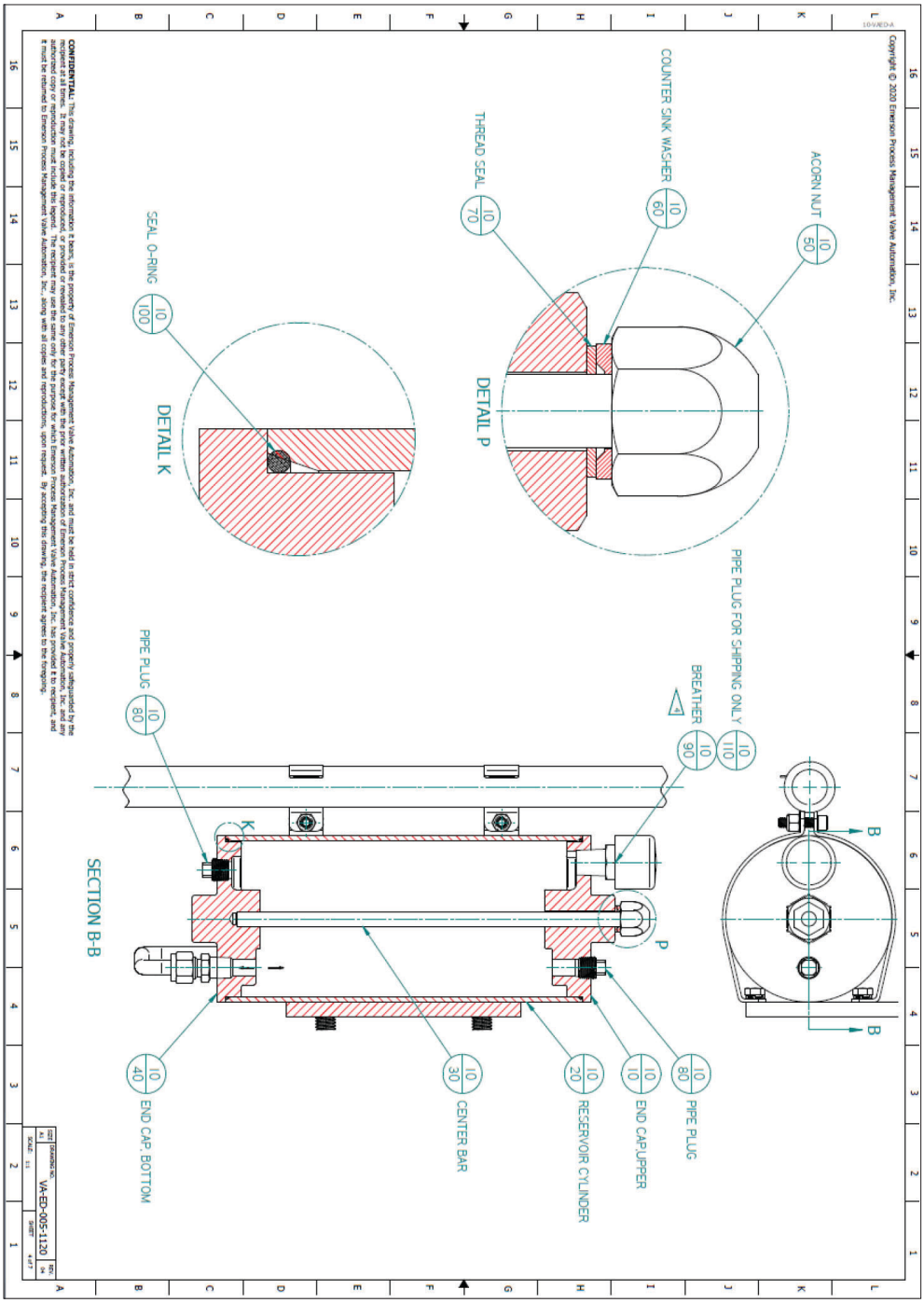

A.7 Part No. VA-ED-005-1120, M18 Assembly Drawing, Remote Mounting Installation, Sheet 5 of 7

Figure A-7

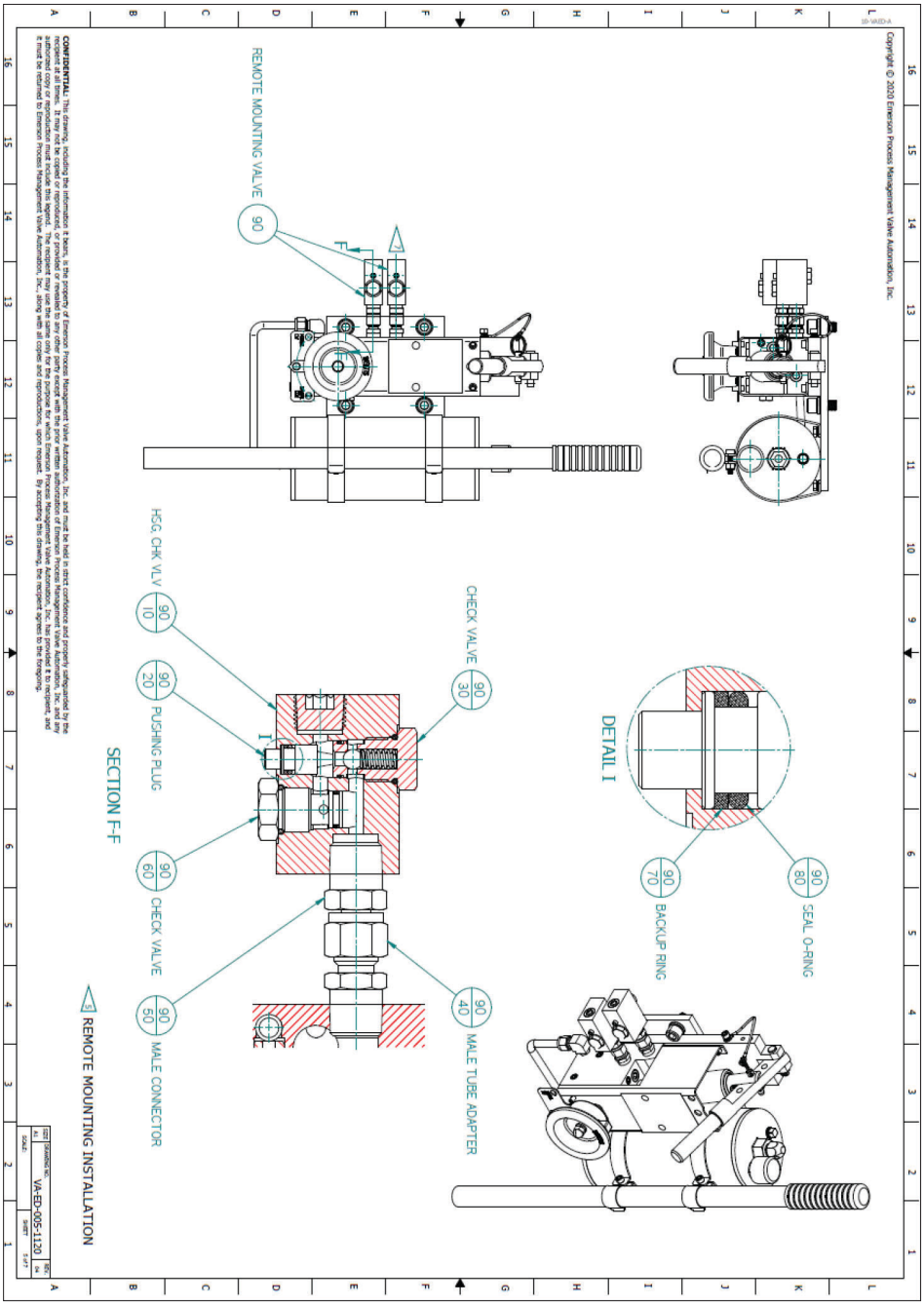

A.8 Part No. VA-ED-005-1120, M18 Assembly Drawing, Auto Reset Installation, Sheet 6 of 7

Figure A-8

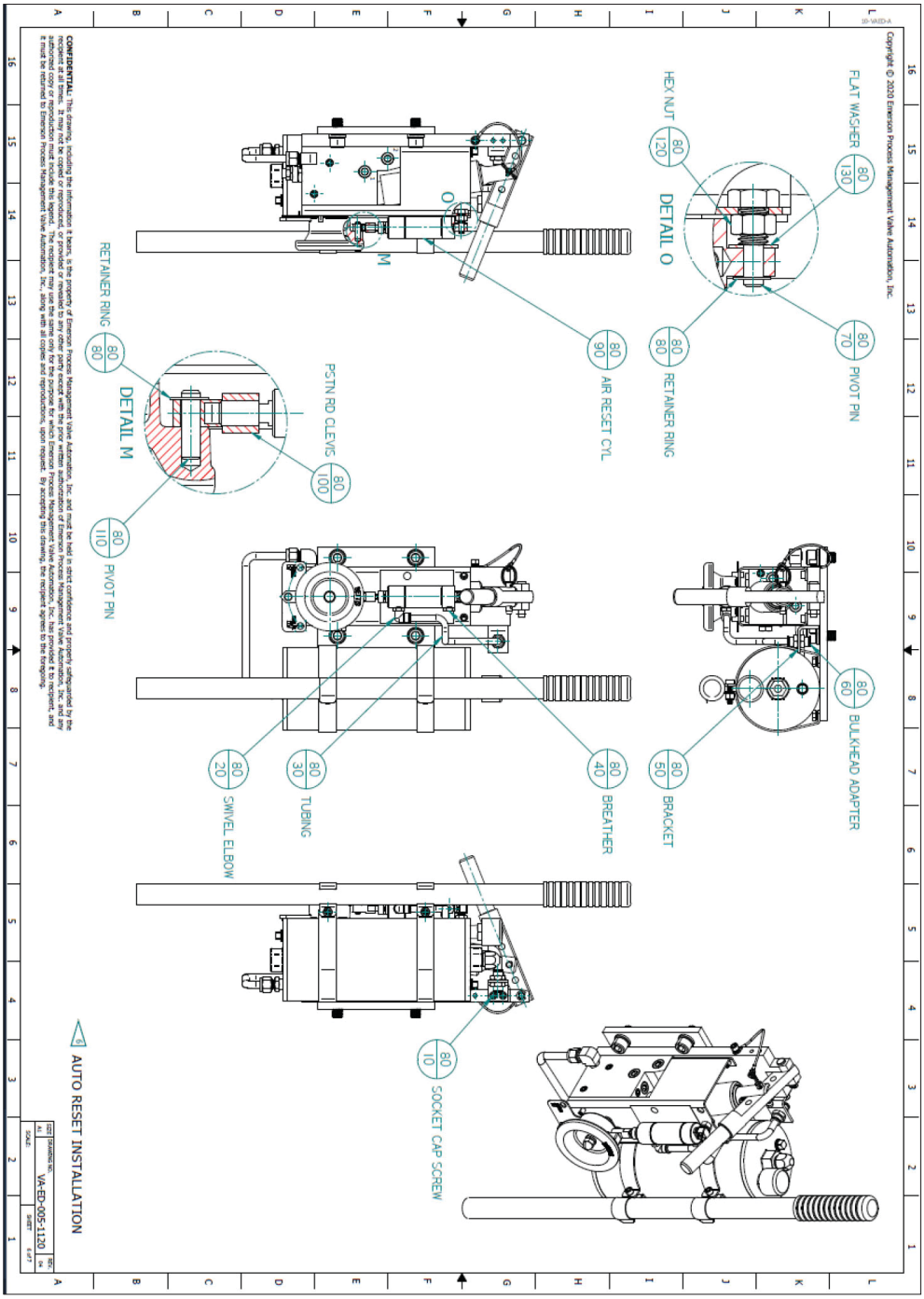

A.9 Part No. VA-ED-005-1120, M18 Assembly Drawing, Hydraulic Schematic, Sheet 7 of 7

Figure A-9

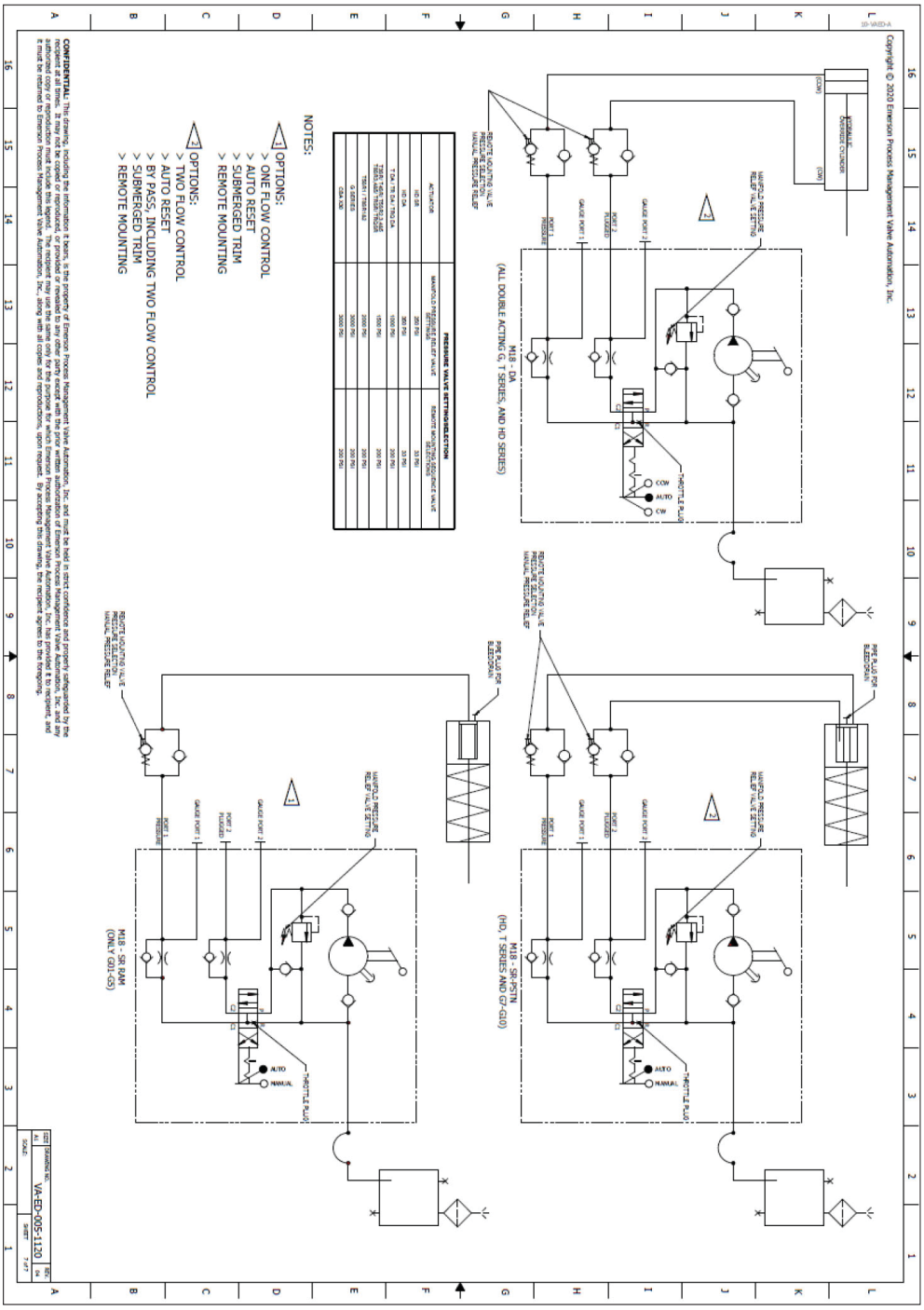

This page intentionally left blank.

World Area Configuration Centers (WACC) offer sales support, service, inventory and commissioning to our global customers.
Choose the WACC or sales office nearest you:

NORTH & SOUTH AMERICA

19200 Northwest Freeway
Houston TX 77065
USA
T +1 281 477 4100

Av. Hollingsworth
325 Iporanga Sorocaba
SP 18087-105
Brazil
T +55 15 3413 8888

ASIA PACIFIC

No. 9 Gul Road
#01-02 Singapore 629361
T +65 6777 8211

No. 1 Lai Yuan Road
Wuqing Development Area
Tianjin 301700
P. R. China
T +86 22 8212 3300

MIDDLE EAST & AFRICA

P. O. Box 17033
Jebel Ali Free Zone
Dubai
T +971 4 811 8100

P. O. Box 10305
Jubail 31961
Saudi Arabia
T +966 3 340 8650

24 Angus Crescent
Longmeadow Business Estate East
P.O. Box 6908 Greenstone
1616 Modderfontein Extension 5
South Africa
T +27 11 451 3700

EUROPE

Holland Fasor 6
Székesfehérvár 8000
Hungary
T +36 22 53 09 50

Strada Biffi 165
29017 Fiorenzuola d'Arda (PC)
Italy
T +39 0523 944 411

For complete list of sales and manufacturing sites, please visit
www.emerson.com/actuationtechnologieslocations or contact us at
info.actuationtechnologies@emerson.com

www.emerson.com/bettis

VCIOM-15296-EN ©2020 Emerson. All rights reserved.

The Emerson logo is a trademark and service mark of Emerson Electric Co.
Bettis™ is a mark of one of the Emerson family of companies.
All other marks are property of their respective owners.

The contents of this publication are presented for information purposes only, and while effort has been made to ensure their accuracy, they are not to be construed as warranties or guarantees, express or implied, regarding the products or services described herein or their use or applicability.
All sales are governed by our terms and conditions, which are available on request. We reserve the right to modify or improve the designs or specifications of our products at any time without notice.

BETTIS™

EMERSON™